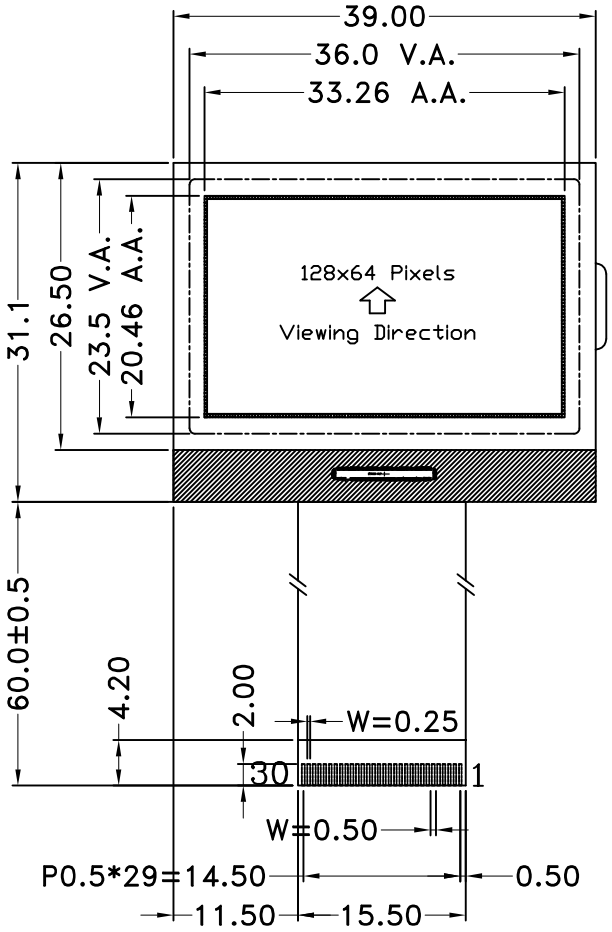

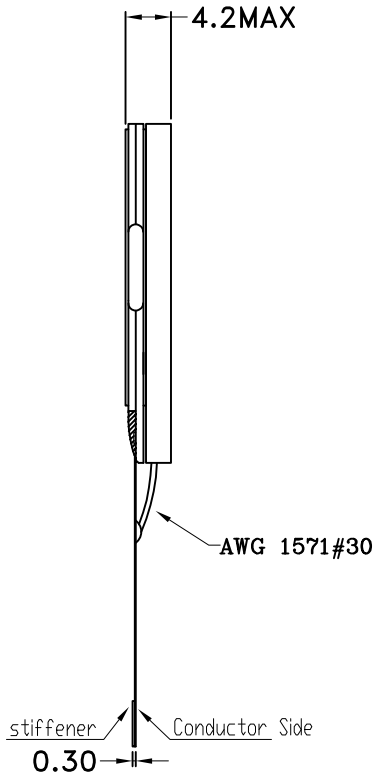

PIN	SYMBOL
1	BLK(−)
2	CS1
3	RES
4	A0
5	WR
6	RD
7	D0
8	D1
9	D2
10	D3
11	D4
12	D5
13	D6
14	D7
15	VSS
16	VOUT
17	CAP3P
18	CAP1N
19	CAP1P
20	CAP2P
21	CAP2N
22	V4
23	V3
24	V2
25	V1
26	V0
27	C86
28	P/S
29	VDD
30	BLA(+)

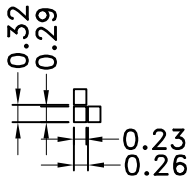

DOT DETAIL
SCALE 5:1

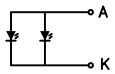

LED Circuit Diagram

*1. LCD Display Type	STN-BLUE,Transmissive,Negative		
*2. Viewing Diretion	6H	*6. Storage Temp	-30°C~80°C
*3. LCD Driver Mode	1/64Duty,1/9Bias	*7. Driver IC	ST7565R
*4. Operating Voltage	3.3V	*8. Backlight	WHITE Vf=3.0v If=30mA
*5. Operating Temp	-20°C~70°C	*9. ROHS	

HOT DISPLAY

Dwg Title: HTG12864C09-25W-30C05-V46			
EDC No:		Ver: A/0	
Scale 1:1	Unit mm	Tol. ±0.3	
Drawn	Checked	Date: 2010-06-07	