DATA SHEET

NV3052CGRB

2160-channel 8-bit Source Driver and GOA/GIP Gate Driver with System-on chip for Color Amorphous TFT-LCDs

Version 0.2
Sep. 2021

Contents

1.Introduction

The NV3052CGRB, a 16,777,216-color System-on-Chip (SoC) RAMless driver LSI designed for small and medium size TFT LCD display, is capable of supporting up to 720xRGBx1280 pixels in resolution. The 2160-channel source driver can provide true 8-bit resolution and generate 256 Gamma-corrected values with an internal D/A converter.

The NV3052CGRB is able to operate with low IO interface power supply. Incorporating with several charge pumps, the NV3052CGRB can generate various voltage levels by an on-chip power management system for gate and source driver.

The built-in timing controller in the NV3052CGRB can support several functions to meet a wide variety of requirements about portable display applications. It provides SPI system interfaces which can be used to configure the system. It can also achieve high speed display data transmission by using the RGB video mode.

The NV3052CGRB also provides standby mode for power control considerations. For further power control requirements, the dynamic backlight control function, which is based on the image content, is also supported.

2. Features

◎ **One-chip solution for color amorphous TFT-LCD**

◎ **Display Resolution**

- 720 x RGB x (1280, others), (Source output from S1 to S1080, S1321 to S2400)
- 640 x RGB x (1280, others), (Source output from S1 to S960, S1441 to S2400)
- 600 x RGB x (1280,1024, others), (Source output from S1 to S900, S1501 to S2400)
- 540 x RGB x (1280,960, others), (Source output from S1 to S810, S1591 to S2400)

◎ **Display Data Memory: None (RAMless)**

◎ **System Interfaces**

- SPI/RGB interface

◎ **Display Features**

- Outputs 256γ-corrected values and using an internal true 8-bit resolution D/A converter to achieve 16,777,216 colors
- Built-in digital separate RGB gamma

◎ **Display Modes**

- Power saving mode (standby)
- Low power consumption structure for source driver

◎ **On Chip Function**

- Support DC-VCOM driving scheme
- RAMless driver with RGB video mode
- Built-in internal oscillator and hardware reset
- On-chip OTP program voltage generator
- Built–in OTP (3 Times) to store ID1~ID3
- Built–in OTP (2 Times) to store gamma curve
- Built–in OTP (1 Time) to store VGMP, VGMN, VCOM calibration
- Built-in 3 power structure modes for application
- Source output voltage level VGMP-AGND: 2.64 ~ 5.85V , VGMN-AGND: -2.51 ~ -5.70V

◎ **Power Supply Range**

- External power IC and PFM:

- I/O pads supply voltage (IOVCC): 1.65 ~ 3.6V
- Analog power supply voltage (VCI): 2.5 ~ 3.6V

- Three-Power Mode:

- I/O pads supply voltage (IOVCC): 1.65 ~ 3.6V

- Analog power supply (VSP)：4.5V to 6V
- Analog power supply (VSN)：-4.5V to -6V

3. Block Diagram

3.1 Block Function:

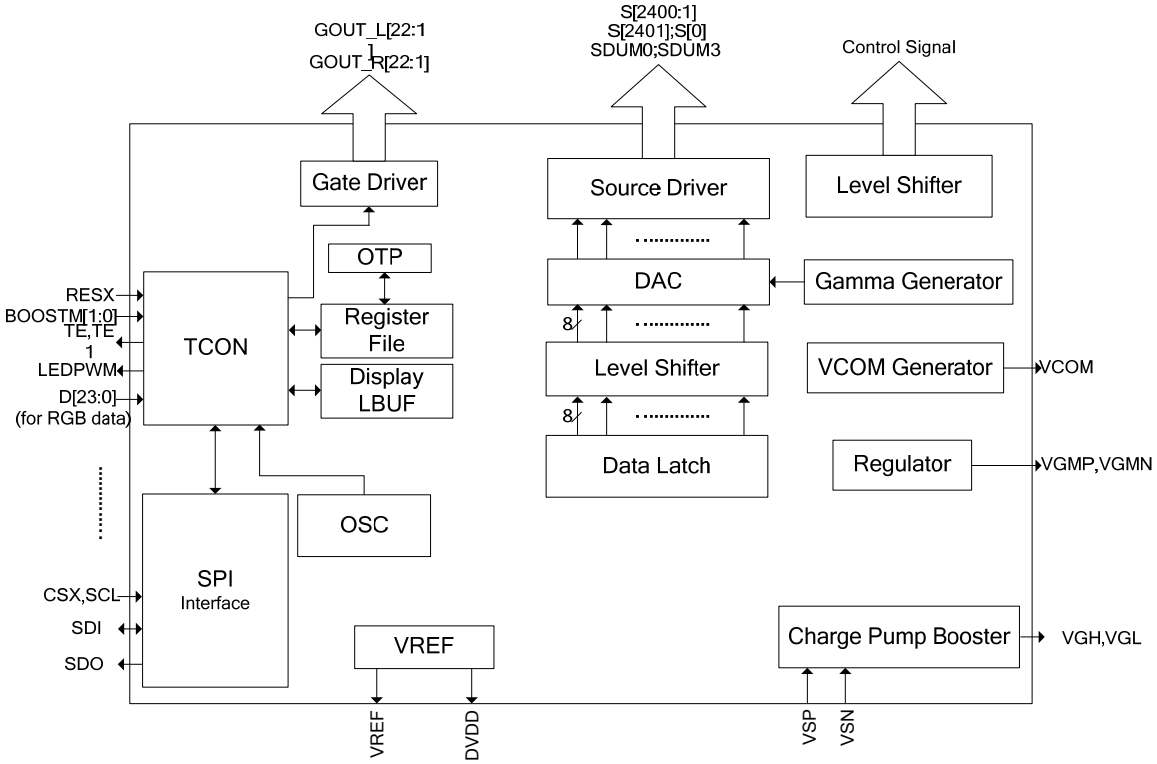

Figure 3.1

3.1.1 System interface

The NV3052CGRB supports the video data transmitted through the SPI/RGB system interface.

3.1.2 Grayscale voltage generating circuit

NV3052CGRB has true 8-bit resolution D/A converter, which generates 256 Gamma-corrected values and cooperates with OP-AMP structure to enhance display quality. The grayscale voltage can be adjusted by grayscale data set in the γ-correction register and RGB can be adjusted separately.

3.1.3 Timing controller

NV3052CGRB has a timing controller, which can generate a timing signal for internal circuit operation such as gate output timing, image data accessing timing, etc.

3.1.4 Oscillator (OSC)

The NV3052CGRB also features an internal oscillator. In standby mode, the oscillator is halted to reduce power consumption.

3.1.5 Source driver circuit

NV3052CGRB consists of a 2160-output source driver circuit (S1 to S1080, S1321 to S2400) and several source dummy outputs (SDUM3;SDUM0;S[2401];S[0]). Data transmitted through RGB video mode are latched when a single line data has been accumulated. And then the latched data controls the source driver and generates a drive waveform.

3.1.6 Gate driver circuit

NV3052CGRB consists of output gate driver control circuit. The gate driver circuit outputs gate driver signals at either VGH or VGL level.

3.1.7 LCD driving power supply circuit

The LCD driving power supply circuit generates the voltage levels VGH, VGL and VCOM for driving an LCD. All this voltages can be adjusted by register setting.

4. PIN DESCRIPTIONS

4.1 Pin Definition

<table>
<tr><th>Signal</th><th>I/O</th><th>PAD Type
(Voltage Level)</th><th>Function</th></tr>
<tr><td colspan="4">Global Control Signal</td></tr>
<tr><td>RS[1]</td><td>I</td><td>Digital Input
(IOVCC-VSSI)</td><td>Control chip work state.
RS[1]=“1”,chip works at display on mode.
RS[1]=“0”,chip off at sleep in mode.</td></tr>
<tr><td>BOOSTM
[1:0]</td><td>I</td><td>Digital Input
(IOVCC-VSSI)</td><td>Boost mode selection pins.
<table>
<tr><th>BOOSTM1</th><th>BOOSTM0</th><th>REG Option</th><th>Mode</th></tr>
<tr><td>0</td><td>1</td><td>X</td><td>Mode-8, External VSP and VSN</td></tr>
<tr><td>1</td><td>0</td><td>X</td><td>Mode-3, Power IC</td></tr>
<tr><td>1</td><td>1</td><td>000</td><td>Mode-1, One Coil + Two MOS</td></tr>
<tr><td>1</td><td>1</td><td>001</td><td>Mode-2, One Coil + One MOS</td></tr>
<tr><td>1</td><td>1</td><td>011</td><td>Mode-4, Two Coil + Two MOS</td></tr>
<tr><td>1</td><td>1</td><td>100</td><td>Mode-6, External VSP and One Coil + One MOS(VSN)</td></tr>
</table>
“REG Option” set by register BOOSTM_OPT[2:0].
These pins must connect to VSSI or IOVCC level.</td></tr>
<tr><td>RESX</td><td>I</td><td>Digital Input
(IOVCC-VSSI)</td><td>Global Reset Signal. Active Low.</td></tr>
<tr><td>TE</td><td>O</td><td>Digital Output
(IOVCC-VSSI)</td><td>Tearing effect output pin is used to synchronize MCU frame writing, activated by S/W command. When this pin is not activated (TE function OFF), this pin is VSSI level.</td></tr>
<tr><td>TE1</td><td>O</td><td>Digital Output
(IOVCC-VSSI)</td><td>Output pin for scan line signal, activated by S/W command. When this pin is not activated, this pin is VSSI level.</td></tr>
<tr><td>LEDPWM</td><td>O</td><td>Digital Output
(IOVCC-VSSI)</td><td>LCD backlight control PWM output pin.</td></tr>
</table>

RGB interface			
HS	I	Digital Input (IOVCC-VSSI)	Horizontal synchronizing input signal for RGB interface operation. If not used, please fix to IOVCC or VSSI.
VS	I	Digital Input (IOVCC-VSSI)	Vertical synchronizing input signal for RGB interface operation. If not used, please fix to the IOVCC or VSSI.
PCLK	I	Digital Input (IOVCC-VSSI)	Dot clock signal for RGB interface operation. If not used, please fix this pin at IOVCC or VSSI.
DE	I	Digital Input (IOVCC-VSSI)	Data enable pin for RGB interface operation. If not used, please fix this pin at IOVCC or VSSI level.
D[23:0]	I	Digital Input (IOVCC-VSSI)	24-bits data bus for RGB. Please let them float or connect to VSSI.
SPI Interface			
CSX	I	Digital Input (IOVCC-VSSI)	Chip select signal for SPI interface operation. ”0” : the NV3052CGRB is accessible ”1” : the NV3052CGRB is not accessible If not used, please fix to the IOVCC or VSSI.
SCL	I	Digital Input (IOVCC-VSSI)	SCL: Serial interface Clock Input. If not used, please fix to the IOVCC or VSSI.
SDI	I/O	Digital I/O (IOVCC-VSSI)	SDI: Serial interface DATA Input/Output. If not used, please fix to the IOVCC or VSSI.
SDO	O	Digital Output (IOVCC-VSSI)	Serial interface DATA output. If not used, please let it open.
Source Control Signals			
S[2400:1321] S[1080:1]	O	Analog Output (VSP-VSN)	Output source driver signals. The D/A converted 256-gray-scale analog voltage is output. Source output mapping with different resolution. Resolution / Source channel 720RGB / S[2400:1321], S[1080:1] 640RGB / S[2400:1441], S[960:1] 600RGB / S[2400:1501], S[900:1] 540RGB / S[2400:1591], S[810:1]
SDUM[3] S[2401]	O	Analog Output (VSP-VSN)	Source dummy output.
S[0] SDUM[0]	O	Analog Output (VSP-VSN)	Source dummy output.

Panel Control and VCOM Pins			
GOUT_L [22:1]	O	Analog Output	Gate control signals for panel in left side of IC.
GOUT_R [22:1]	O	Analog Output	Gate control signals for panel in right side of IC.
VCOM_L	O	DUMMY Pin	VCOM DUMMY Pin.
VCOM_R	O	Analog Output	VCOM signal output.
Charge Pump / Boost			
VSP	I	Analog Input	Input voltage from the set-up circuit (4.5V to 6V).
VSN	I	Analog Input	Input voltage from the set-up circuit (-4.5V to -6V).
CSP	I	Analog Input	Coil Booster sensing input to generate VSP. Connect to VSP.
CSN	I	Analog Input	Coil Booster sensing input to generate VSN. Connect to VSN.
VGL	O	Analog Output	Negative Power Supply for Gate Driver. VGL=2xVSN, 3xVSN, 4xVSN, 4xVSN.
EXTP	O	Analog Output	Booster/charge pump power IC output to generate VSP.
EXTN	O	Analog Output	Booster/charge pump power IC output to generate VSN.
Regulator Relative Pins			
VGMP	O	Analog Output	Output voltage generated from VSP. It's used for positive gray scale voltage.
VGMN	O	Analog Output	Output voltage generated from VSN. It's used for negative gray scale voltage.
VREF	O	Analog Output	Reference Voltage for internal voltage generating circuits.

Power Supply and Regulator pins			
VCI	I	Power Supply	Power supply for analog circuits. (VCI=2.5V to 6V)
IOVCC	I	Power Supply	External Power Supply for IO pads and other logic circuits. (IOVCC=1.65 to 3.6V)
PPRECH	I	Power Supply	Pre-charge power for source (can be connected to IOVCC or VCI).
VPP	I	Power Supply	Input power for NV memory programming. Input power range: 8.0V ~ 8.5V (Typical=8.25V). When not under programming, VPP pin can be float or tied to ground.
AGND	I	Ground	Analog Ground for analog circuits.
VSSI	I	Ground	I/O Ground for I/O logic circuits.
DGND	I	Ground	Digital Ground for digital circuits.
RGND	I	Ground	Analog Ground for regulators.
CGND1	I	Ground	Analog Ground for PUMPs.
DVDD	O	Analog Output	Internal Power Supply for Digital Logic Circuits.

Test/Dummy Signal			
TEST_EN	I	Digital Input (IOVCC-VSSI)	Internal pull low, digital test enable, active high. If not used, please let it open or connect to VSSI.
BIST_EN	I	Digital Input (IOVCC-VSSI)	Internal pull low, CP test enable, active high. If not used, please let it open or connect to VSSI.
SPI_EN	I	Digital Input (IOVCC-VSSI)	Internal pull low, SPI interface operation enable, active high. If not used, please let it open or connect to VSSI.
CLK_SEL	I	Digital Input (IOVCC-VSSI)	Test pin, internal pull low. If not used, please let it open or connect to VSSI.
EXT_CLK	I	Digital Input (IOVCC-VSSI)	Test pin, If not used, please let it open or connect to VSSI.
TEST[3:0]	I	Digital Input (IOVCC-VSSI)	Test pins. Please let them float or connect to VSSI.
ATEST[1]	O	Analog test pin out (VSP-RGND)	Analog test pin out, positive output.
ATEST[2]	O	Analog test pin out (RGND-VSN)	Analog test pin out, negative output.
TOUT[3:0]	O	Digital Output (IOVCC-VSSI)	Test output pins. Please let them float.
VCOM_DUM	-	-	Dummy pin. Left it open.
DUMMYR1	-	-	Dummy pins. For bonding resistance measurement. There are two pads here, propose to connect them separately.
DUMMY/DUMMY1/ DUMMY2	-	-	Bottom of the chip. Dummy pins. They are not used, left it open.
DUMMY3-DUMMY30/DUMMY103 - DUMMY222/ DUMMY295-DUMMY322	-	-	Top of the chip. Dummy pins. They are not used, left it open.

4.2. Power Block Diagram

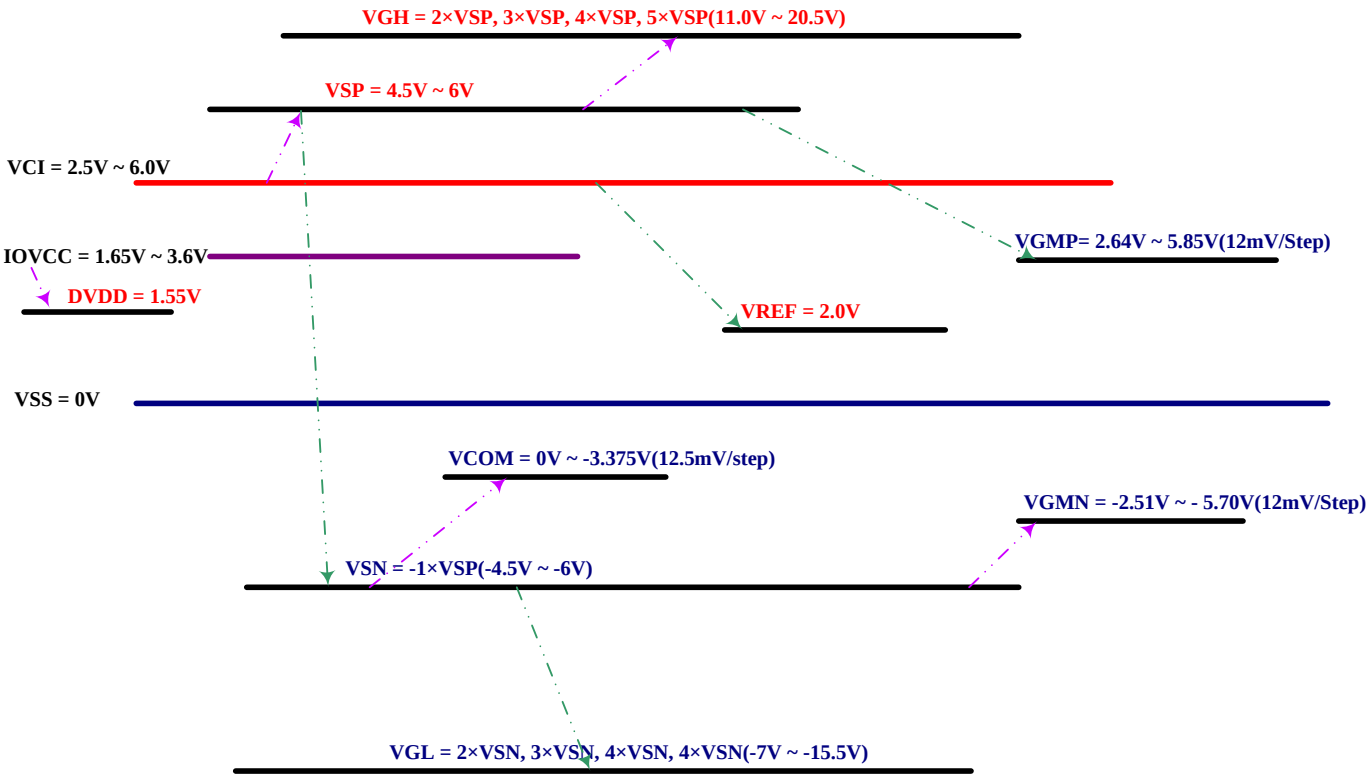

4.3. Power Supply Configuration

Six power structures for different applications controlled by BOOSTM[1:0] pins and REG option, like the following table.

BOOSTM1	BOOSTM0	REG Option	Mode
0	1	X	Mode-8, External VSP and VSN
1	0	X	Mode-3, Power IC
1	1	000	Mode-1, One Coil + Two MOS
1	1	001	Mode-2, One Coil + One MOS
1	1	011	Mode-4, Two Coil + Two MOS
1	1	100	Mode-6, External VSP and One Coil + One MOS(VSN)

"REG Option" locates at page1 R80h D[2:0].

These pins must connect to VSSI or IOVCC level.

4.3.1. One Coil + Two MOS (Mode-1, BOOSTM=2'b11)

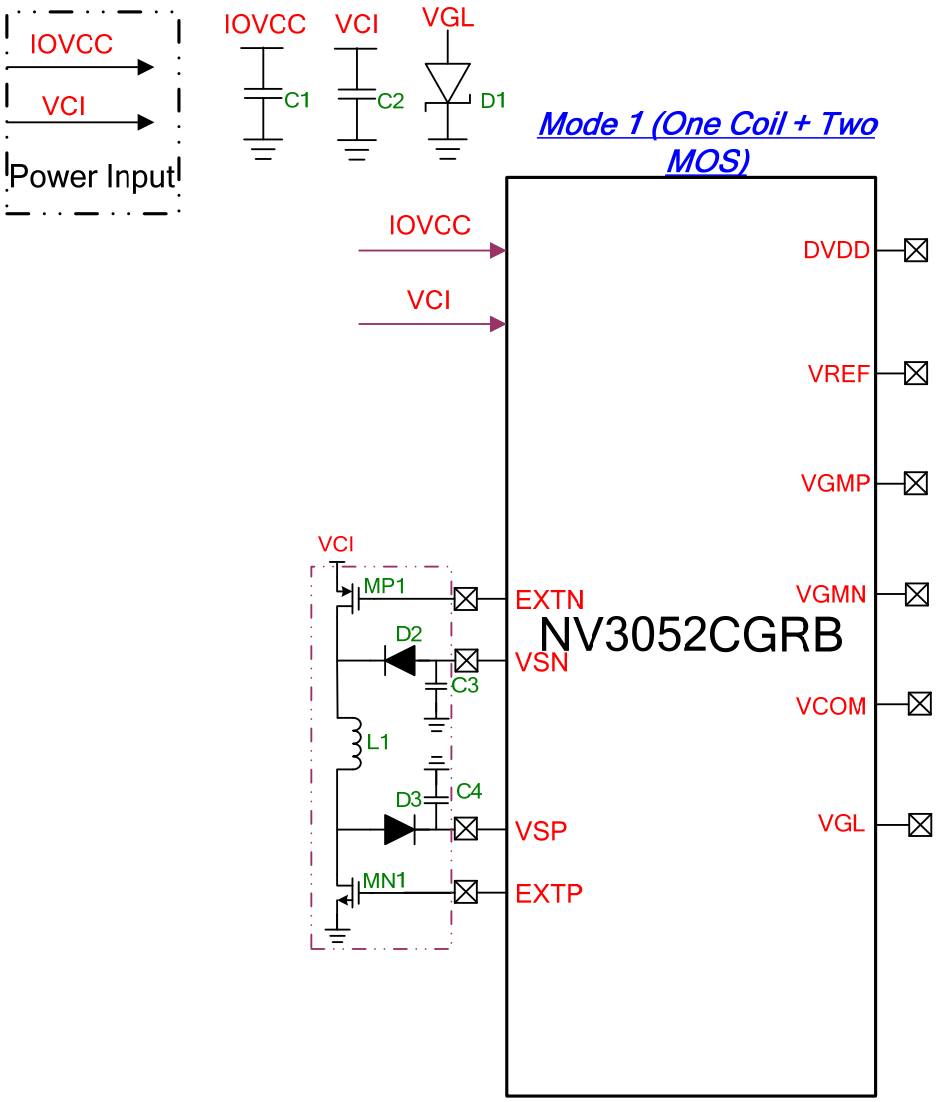

Fig 4.1

4.3.2. Mode 2: One Coil + One MOS (Mode-2 BOOSTM=2'b11)

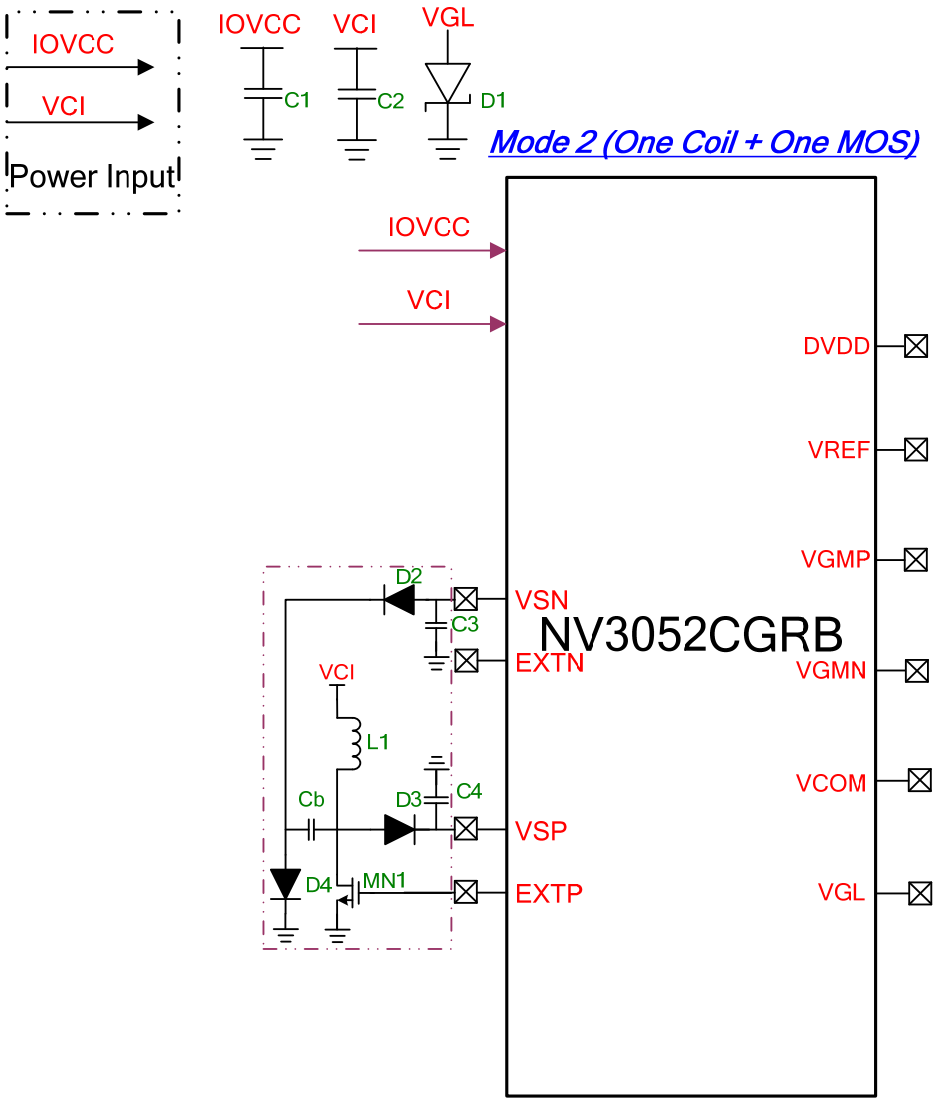

Fig 4.2

4.3.3. Mode 3: Power IC mode (Mode-3 BOOSTM=2'b10)

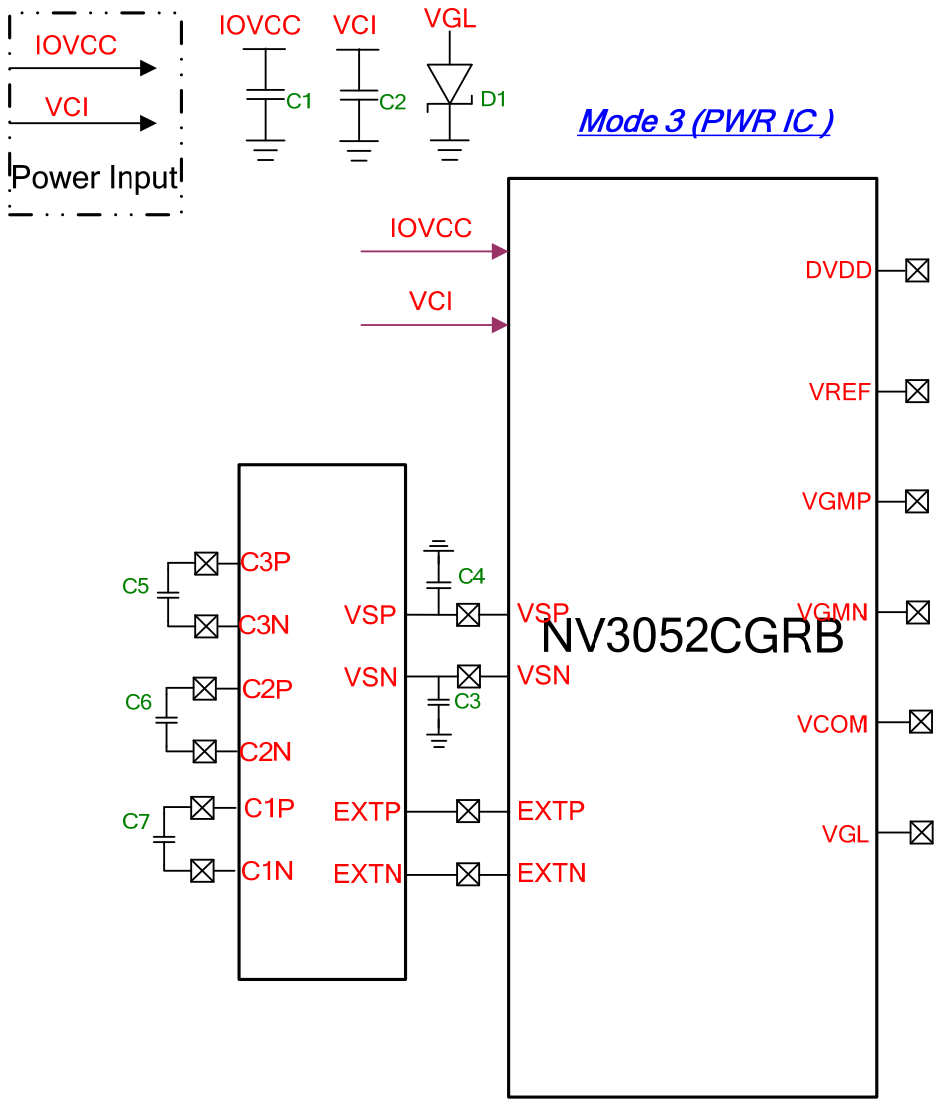

Fig 4.3

4.3.4. Mode 4: Two Coil + Two MOS (Mode-4 BOOSTM=2'b11)

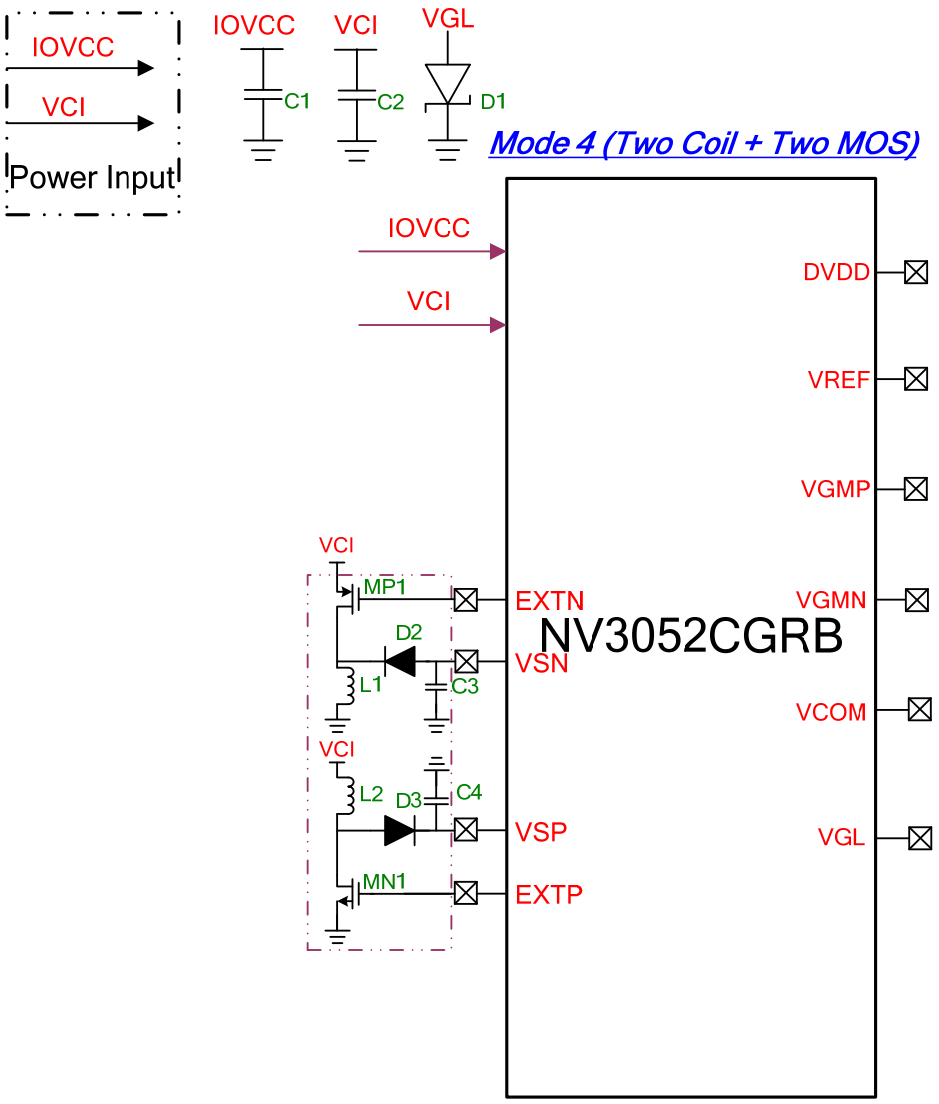

Fig 4.4

4.3.5. Mode 6: External VSP + VSN Coil (Mode-6 BOOSTM=2'b11)

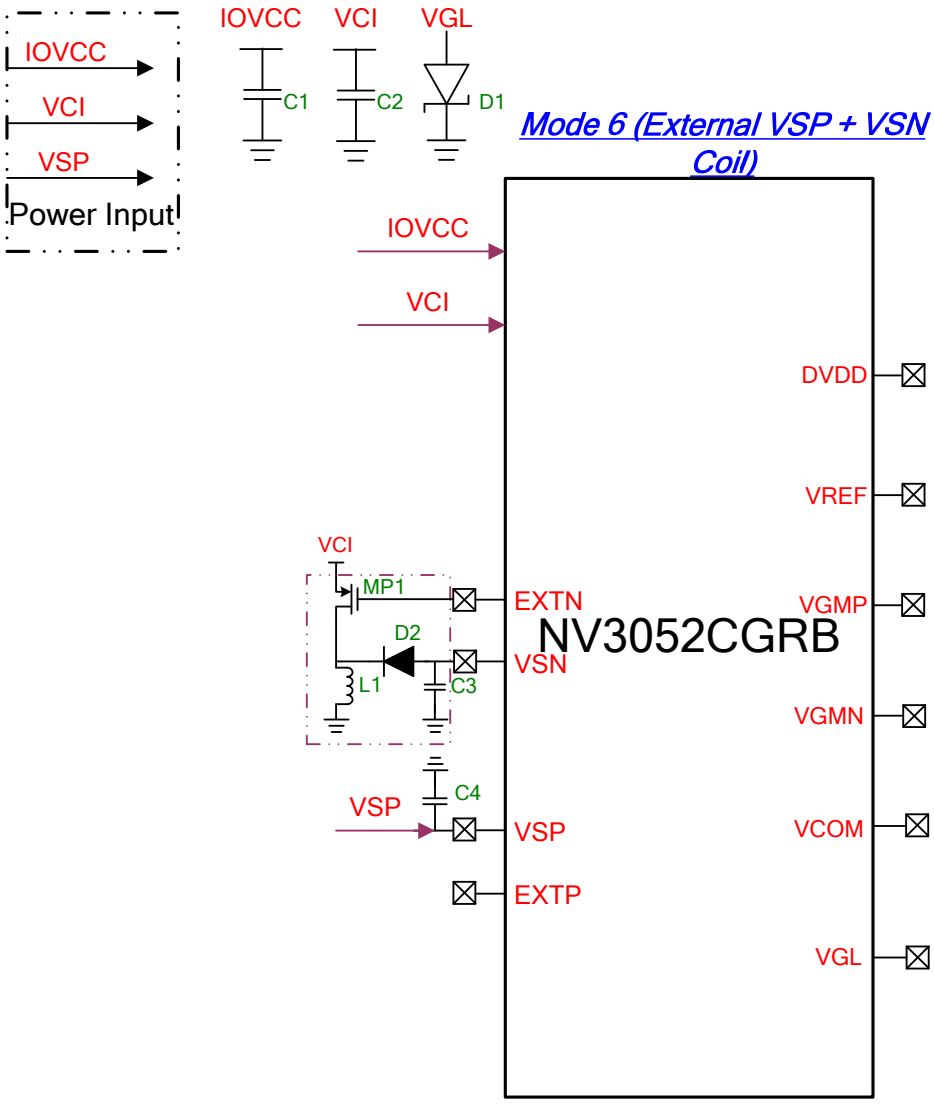

Fig 4.5

4.3.6. Mode 8: External VSP and VSN (Mode-8 BOOSTM=2'b01)

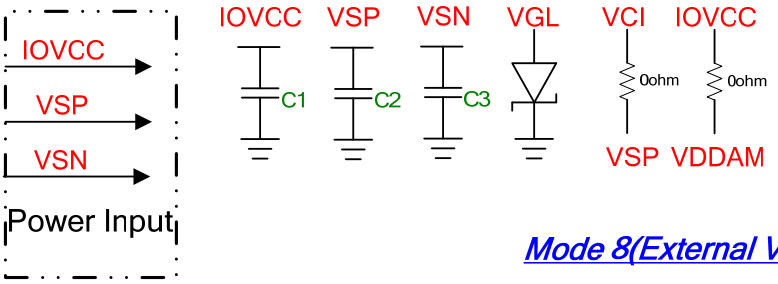

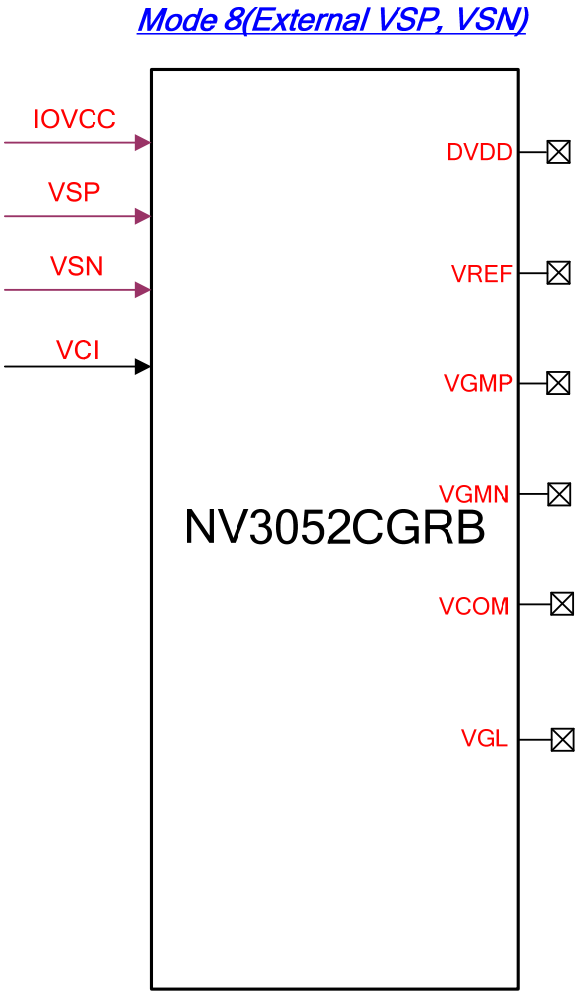

Fig 4.6

4.4 BOM List

4.4.1. Mode-1: One Coil + Two MOS

NV3052CGRB BOM Lists for WXGA (VSP and VSN use one Coil-Booster)				
No.	**Signal name**	**Values**	**Max ability**	**Note**
1	IOVCC(C1)	1.0uF	4V	I/O and Digital Power
2	VCI(C2)	2.2uF	6.3V	Analog Power
3	L1	10uH		VSP/VSN Booster
4	Power PMOS(MP1) +Diode(D2)			
5	Power NMOS(MN1) +Diode(D3)			
6	VSN(C3)	2.2uF	6.3V	
7	VSP(C4)	2.2uF	6.3V	
8	VGL(D1)	schottky diode		GND-VGL diode

Note: Larger L1/VSP/VSN component values are proposed to get better power efficiency and stability.

4.4.2. Mode-2: One Coil + One MOS

NV3052CGRB BOM Lists for WXGA (VSP and VSN use one Coil-Booster & one Cap)				
No.	**Signal name**	**Values**	**Max ability**	**Note**
1	IOVCC(C1)	1.0uF	4V	I/O and Digital Power
2	VCI(C2)	2.2uF	6.3V	Analog Power
3	L1	10uH		VSP/VSN Booster
4	Power NMOS(MN1) +3Diode(D2, D3, D4)			
5	Cb	1.0uF	10V	
6	VSN(C3)	2.2uF	6.3V	
7	VSP(C4)	2.2uF	6.3V	
8	VGL(D1)	schottky diode		GND-VGL diode

Note: Larger L1/VSP/VSN component values are proposed to get better power efficiency and stability.

4.4.3. Mode-3: Power IC mode

NV3052CGRB BOM Lists for WXGA				
No.	**Signal name**	**Values**	**Max ability**	**Note**
1	IOVCC(C1)	1.0uF	4V	I/O and Digital Power
2	VCI(C2)	2.2uF	6.3V	Analog Power
3	C5(C3P/C3N)	1.0uF	6.3V	NV7052 related
4	C6(C2P/C2N)	1.0uF	6.3V	
5	C7(C1P/C1N)	1.0uF	6.3V	
6	VSN(C3)	2.2uF	6.3V	
7	VSP(C4)	2.2uF	6.3V	
8	VGL(D1)	schottky diode		GND-VGL diode

Note: Larger VSP/VSN component values are proposed to get better power efficiency and stability.

4.4.4. Mode-4: Two Coil + Two MOS

NV3052CGRB BOM Lists for WXGA (VSP Coil-Booster and VSN Coil-Booster)				
No.	**Signal name**	**Values**	**Max ability**	**Note**
1	IOVCC(C1)	1.0uF	4V	I/O and Digital Power
2	VCI(C2)	2.2uF	6.3V	Analog Power
3	L1	10uH		VSN Booster
4	Power PMOS(MP1) +Diode(D2)			
5	VSN(C3)	2.2uF	6.3V	
6	L2	10uH		VSP Booster
7	Power NMOS(MN1) +Diode(D3)			
8	VSP(C4)	2.2uF	6.3V	
9	VGL(D1)	schottky diode		GND-VGL diode

Note: Larger L1/L2/VSP/VSN component values are proposed to get better power efficiency and stability.

4.4.5. Mode-6: External VSP + VSN Coil

NV3052CGRB BOM Lists for WXGA (External VSP and VSN Coil-Booster)				
No.	**Signal name**	**Values**	**Max ability**	**Note**
1	IOVCC(C1)	1.0uF	4V	I/O and Digital Power
2	VCI(C2)	2.2uF	6.3V	Analog Power
3	L1	10uH		VSN Booster
4	Power PMOS(MP1) +Diode(D2)			
5	VSN(C3)	2.2uF	6.3V	
6	VSP(C4)	2.2uF	6.3V	
7	VGL(D1)	schottky diode		GND-VGL diode

Note: Larger L1/VSP/VSN component values are proposed to get better power efficiency and stability.

4.4.6. Mode-8: External VSP and VSN

NV3052CGRB BOM Lists for WXGA (External VSP and VSN)				
No.	**Signal name**	**Values**	**Max ability**	**Note**
1	IOVCC(C1)	1.0uF	4V	I/O and Digital Power
2	VSP(C2)	2.2uF	6.3V	Analog Power
3	VSN(C3)	2.2uF	6.3V	Analog Power
4	VGL(D1)	schottky diode		GND-VGL diode

Note: Larger VSP/VSN component values are proposed to get better power efficiency and stability.

5.INSTRUCTIONS

5.1. Outline

The NV3052CGRB supports SPI system interface to configure the system via accessing command registers. While accessing the command registers, the information that indicates which register would be accessed should be sent first. After that, the new value can be updated via system interface. Updating command instructions can also be accomplished by using SPI system interface .

The NV3052CGRB has the following major categories of

instructions:

(1). System function instructions (User Command Set).

(2). Customer Command List and Description (Manufacturer Command Set / Command 2).

Since updating these instructions are asynchronous to the internal clock of the NV3052CGRB, the updating procedure will require no waiting cycles. Furthermore, the updating procedure will not interfere with the processing of the host controller, this makes instructions can be handled smoothly and efficiently.

The following contents of this chapter will describe the supported instructions in detail.

System function commands

After the H/W reset by RESX pin or S/W reset by SWRESET command, each internal register will return to the default state (Please refer to “RESET TABLE” section). The commands 10h, 11h, 20h, 21h, 22h, 23h, 28h, 29h, 36h will be updated only during V-sync periods while module is in the “Sleep Out” mode to avoid abnormal visual effects, and will be updated immediately in the “Sleep In” mode. The Read Display Power Mode (0Ah), Read Display MADCTR (0Bh), Read Display Pixel Format (0Ch), Read Display Image Mode (0Dh),Read Display Signal Mode (0Eh), and Read Display Self Diagnostic Result (0Fh) will be updated immediately in both “Sleep In” and “Sleep Out” mode.

System function command accessing flow is described as the following example.

Example 1: Sleep Out
CMDWR 0x11

Example 2: Display On
CMDWR 0x29

Example 3: TE ON
CMDWR 0x35
DATWR 0x00

System Function Command List

Page 0 Command													
Instruction	DCX	WRX	RDX	D7	D6	D5	D4	D3	D2	D1	D0	Hex	Function
NOP	0	↑	1	0	0	0	0	0	0	0	0	00h	No operation
SWRESET	0	↑	1	0	0	0	0	0	0	0	1	01h	Software reset
RDDIDIF	0	↑	1	0	0	0	0	0	1	0	0	04h	Read display ID
	1	1	↑	ID1								30h	ID1 read
	1	1	↑	ID2								52h	ID2 read
	1	1	↑	ID3								01h	ID3 read
RDDPM	0	↑	1	0	0	0	0	1	0	1	0	0Ah	read display power mode
	1	1	↑	Slpout	idle_mode_on	0	slpout	normal	disp_on	0	0	08h	-
RDD MADCTL	0	↑	1	0	0	0	0	1	0	1	1	0Bh	read display MADCTL
	1	1	↑	0	0	0	0	bgr	0	ss	gs	00h	-
RDDCOLMOD	0	↑	1	0	0	0	0	1	1	0	0	0Ch	read display pixel format
	1	1	↑	0	dpi[2:0]			0	0	0	0	70h	-
RDDIM	0	↑	1	0	0	0	0	1	1	0	1	0Dh	Read display image
	1	1	↑	0	0	inver_on	pixel_on	pixel_off	gcs[2:0]			00h	-
RDDSM	0	↑	1	0	0	0	0	1	1	1	0	0Eh	Read display signal mode
	1	1	↑	tear_on	tear_mode	0	0	0	0	0	0	00h	-
RDDSDR	0	↑	1	0	0	0	0	1	1	1	1	0Fh	Read display self-diagnostic result
	1	1	↑	regld	fundt	0	0	0	0	0	0	00h	-
SLPIN	0	↑	1	0	0	0	1	0	0	0	0	10h	Sleep in
SLPOUT	0	↑	1	0	0	0	1	0	0	0	1	11h	Sleep out
NORON	0	↑	1	0	0	0	1	0	0	1	1	13h	normal mode on and partial mode off
INVOFF	0	↑	1	0	0	1	0	0	0	0	0	20h	Display inversion off
INVON	0	↑	1	0	0	1	0	0	0	0	1	21h	Display inversion on
ALLPOFF	0	↑	1	0	0	1	0	0	0	1	0	22h	All Pixel off
ALLPON	0	↑	1	0	0	1	0	0	0	1	1	23h	All Pixel on
DISPOFF	0	↑	1	0	0	1	0	1	0	0	0	28h	Display off
DISPON	0	↑	1	0	0	1	0	1	0	0	1	29h	Display on
TEOFF	0	↑	1	0	0	1	1	0	1	0	0	34h	Tearing Effect Line off

Page 0 Command													
Instruction	DCX	WRX	RDX	D7	D6	D5	D4	D3	D2	D1	D0	Hex	Function
TEON	0	↑	1	0	0	1	1	0	1	0	1	35h	Tearing Effect Line on
	1	↑	1	0	0	0	0	0	0	0	tear_mode	00h	-
MADCTL	0	↑	1	0	0	1	1	0	1	1	0	36h	Memory data access control
	1	↑	1	0	0	0	0	bgr	0	ss	gs	00h	-
IDMODEOFF	0	↑	1	0	0	1	1	1	0	0	0	38h	Idle mode off
IDMODEON	0	↑	1	0	0	1	1	1	0	0	1	39h	Idle mode on and other mode off
COLMOD	0	↑	1	0	0	1	1	1	0	1	0	3Ah	Interface pixel format
	1	↑	1	0	dpi[2:0]			0	0	0	0	70h	-
WRTESCN	0	↑	1	0	1	0	0	0	1	0	0	44h	Write tear scanline
	1	↑	1	te_on_lines[7:0]								00h	-
RDSCNL	0	↑	1	0	1	0	0	0	1	0	1	45h	Read scanline
	1	1	↑	te_on_lines[7:0]								00h	-
WRTEWIDTH	0	↑	1	0	1	0	0	0	1	1	0	46h	Write Tear Scan Line Width
	1	↑	1	te_width[7:0]								00h	-
RDTEWIDTH	0	↑	1	0	1	0	0	0	1	1	1	47h	Read Tear Scan Line Width
	1	1	↑	te_width[7:0]								00h	-
WRDISBV	0	↑	1	0	1	0	1	0	0	0	1	51h	Write Display Brightness Value
	1	↑	1	dbv[7:0]								00h	-
RDDISBV	0	↑	1	0	1	0	1	0	0	1	0	52h	Read Display Brightness
	1	1	↑	dbv[7:0]								00h	-
WRCTRLD	0	↑	1	0	1	0	1	0	0	1	1	53h	Write CTRL Display
	1	↑	1	0	0	bctrl	0	disp_dim	backlight_on	0	0	00h	-
RDCTRLD	0	↑	1	0	1	0	1	0	1	0	0	54h	Read CTRL Display Value
	1	1	↑	0	0	bctrl	0	disp_dim	backlight_on	0	0	00h	-

Page 0 Command													
Instruction	DCX	WRX	RDX	D7	D6	D5	D4	D3	D2	D1	D0	Hex	Function
RDID1	0	↑	1	1	1	0	1	1	0	1	0	DAh	read display id 1
	1	1	↑	id1								30h	-
RDID2	0	↑	1	1	1	0	1	1	0	1	1	DBh	read display id 2
	1	1	↑	id2								52h	-
RDID3	0	↑	1	1	1	0	1	1	1	0	0	DCh	read display id 3
	1	1	↑	id3								01h	-
RDEXTCSPI	0	↑	1	1	1	1	1	1	0	0	0	F8h	Read EXTC Command In SPI
	1	↑	1	ext_spi_re	0	0	0	0	0	0	0	00h	-
ENEXTC	0	↑	1	1	1	1	1	1	1	1	1	FFh	EXTC Command Set Enable Register
	1	↑	1	0	0	0	0	0	0	page[1:0]		00h	-

5.2. SYSTEM COMMAND DESCRIPTION

5.2.1. NOP (00h)

00H		NOP (No Operation)								
	Write/Read	D7	D6	D5	D4	D3	D2	D1	D0	Default
Command	Write	0	0	0	0	0	0	0	0	00H
Parameter	-	No Parameter								-
Description	This command is an empty command. It does not have any effect on the NV3052CGRB.									
Restriction	-									
Register Availability										
Default										

Status	Availability
Normal Mode On,Sleep Out	Yes
Sleep Out	Yes
Sleep In	Yes

Status	Default Value
Power On Sequence	N/A
S/W Reset	N/A
H/W Reset	N/A

5.2.2. Software Reset(01h)

01H		SWRESET (Software Reset)								
	Write/Read	D7	D6	D5	D4	D3	D2	D1	D0	Default
Command	Write	0	0	0	0	0	0	0	1	01H
Parameter	-	No Parameter								-
Description	When the Software Reset command is written, it causes a software reset. It resets the commands and parameters to their S/W Reset default values.									
Restriction	It is necessary to wait 5msec before sending a new command following software reset.The display module loads all display suppliers' factory default values to the registers during 5msec.If Software Reset is applied during Sleep Out mode, it will be necessary to wait 120msec before sending Sleep Out command.The Software Reset command cannot be sent during Sleep Out sequence.									
Register Availability										

Status	Availability
Normal Mode On,Sleep Out	Yes
Sleep Out	Yes
Sleep In	Yes

Default	
Status	Default Value
Power On Sequence	N/A
S/W Reset	N/A
H/W Reset	N/A

5.2.3 Read Display ID(04h)

04H		RDDIDIF (Read Display ID)								
	Write/Read	D7	D6	D5	D4	D3	D2	D1	D0	Default
Command	Write	0	0	0	0	0	1	0	0	04H
1st parameter	Read	ID1								30h
2nd parameter	Read	ID2								52h
3rd parameter	Read	ID3								01h
Description	The 1st parameter (ID1): LCD module's manufacturer ID. The 2nd parameter (ID2): LCD module/driver version ID. The 3rd parameter (ID3): LCD module/driver ID. Commands RDID1/2/3(Dah, DBh, DCh) read data correspond to the parameters 1,2,3 of the command 04h,respectively.									
Restriction										
Register Availability										

Status	Availability
Normal Mode On, Idle Mode Off, Sleep Out	Yes
Normal Mode On, Idle Mode On, Sleep Out	Yes
Partial Mode On, Idle Mode Off, Sleep Out	Yes
Partial Mode On, Idle Mode On, Sleep Out	Yes
Sleep In	Yes

Default

Status	Default Value		
	ID1	ID2	ID3
Power On Sequence	30h	52h	01h
S/W Reset	30h	52h	01h
H/W Reset	30h	52h	01h

Flow Chart	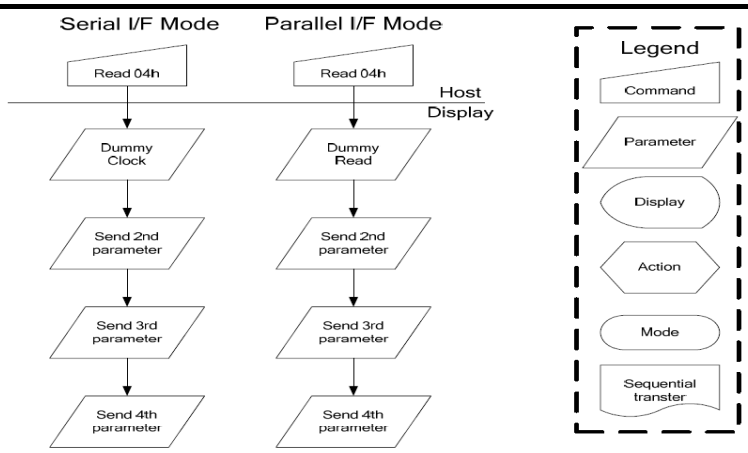

Serial I/F Mode
Parallel I/F Mode
Read 04h
Read 04h
Host
Display
Dummy Clock
Dummy Read
Send 2nd parameter
Send 2nd parameter
Send 3rd parameter
Send 3rd parameter
Send 4th parameter
Send 4th parameter
Legend
Command
Parameter
Display
Action
Mode
Sequential transter

5.2.4. Read Display Power Mode(0Ah)

0AH		RDDPM (Read Display Power Mode)								
	Write/Read	D7	D6	D5	D4	D3	D2	D1	D0	Default
Command	Write	0	0	0	0	1	0	1	0	0Ah
parameter	Read	slpout	idle_mode_on	0	slpout	normal	disp_on	0	0	08h
Description	slpout =0,Sleep In Mode. slpout =1,Sleep Out Mode. normal =0,Display Normal Mode Off. normal =1,Display Normal Mode On. disp_on=0,Display is Off. disp_on =1, Display is On. idle_mode_on=0: idel mode off. idle_mode_on=1: idel mode on.									
Restriction	-									
Register Availability										
Default										

Status	Availability
Normal Mode On,Sleep Out	Yes
Sleep Out	Yes
Sleep In	Yes

Status	Default Value
Power On Sequence	8’h08
S/W Reset	8’h08
H/W Reset	8’h08

5.2.5. Read Display MADCTL(0BH)

0BH		RDDMADCTL(Read Display MADCTL)								
	Write/Read	D7	D6	D5	D4	D3	D2	D1	D0	Default
Command	Write	0	0	0	0	1	0	1	1	0BH
Parameter	Read	0	0	0	0	BGR	0	SS	GS	00H
Description	This command indicates the current status of the display: BGR=0,RGB format. BGR=1,BGR format. SS=0,Source output Left to Right. SS=1,Source output Right to Left. GS=0,Gate output from top to bottom. GS=1,Gate output from bottom to top.									
Restriction	-									
Register Availability										

Status	Availability
Normal Mode On,Sleep Out	Yes
Sleep Out	Yes
Sleep In	Yes

Default

Status	Default Value
Power On Sequence	**8'**h00
S/W Reset	**8'**h00
H/W Reset	**8'**h00

5.2.6. Read Display Pixel Format(0CH)

0CH		RDDCOLMOD (Read Display COLMOD)								
	Write/Read	D7	D6	D5	D4	D3	D2	D1	D0	Default
Command	Write	0	0	0	0	1	1	0	0	0CH
Parameter	Read	0	dpi[2:0]			0	0	0	0	70H

Description

This command indicates the current status of the display as described in the table below:

dpi[2:0]			Interface Format
1	0	1	16-bit/pixel
1	1	0	18-bit/pixel
1	1	1	24-bit/pixel
Others			Reserved

Restriction

-

Register Availability

Status	Availability
Normal Mode On,Sleep Out	Yes
Sleep Out	Yes
Sleep In	Yes

Default

Status	Default Value
Power On Sequence	8’h70
S/W Reset	8’h70
H/W Reset	8’h70

5.2.7. Read Display Image Mode(0DH)

0DH		RDDIM (Read Display Image Mode)								
	Write/Read	D7	D6	D5	D4	D3	D2	D1	D0	Default
Command	Write	0	0	0	0	1	1	0	1	0DH
parameter	Read	0	0	inver_on	pixel_on	pixel_off	gcs[2:0]			00H
Description	inver_on =0,Inversion is Off. inver_on =1,Inversion is On. pixel_on =0,Normal Display. pixel_on =1,White Display. pixel_off =0,Normal Display. pixel_off =1,Black Display. GCS=3’b000,GC0 is selected,others are not defined.									
Restriction	-									
Register Availability										

Status	Availability
Normal Mode On,Sleep Out	Yes
Sleep Out	Yes
Sleep In	Yes

Default

Status	Default Value
Power On Sequence	8’h00
S/W Reset	8’h00
H/W Reset	8’h00

5.2.8. Read Display Signal Mode(0EH)

0EH		RDDSM (Read Display Signal Mode)								
	Write/Read	D7	D6	D5	D4	D3	D2	D1	D0	Default
Command	Write	0	0	0	0	1	1	1	0	0Eh
Parameter	Read	tear_on	tear_mode	0	0	0	0	0	0	00h

Description

This command indicates the current status of the display.
TEON=0,Tearing Effect Line Off.
TEON=1, Tearing Effect Line On.
TEAR_MODE=0,The Tearing Effect Output line consists of V-Blanking information only.

EAR_MODE=1,The Tearing Effect Output line consists of both V-Blanking and H-Blanking informatic

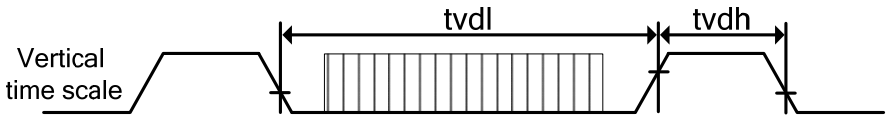

Restriction

-

Register Availability

Status	Availability
Normal Mode On,Sleep Out	Yes
Sleep Out	Yes
Sleep In	Yes

Default

Status	Default Value
Power On Sequence	8’h00
S/W Reset	8’h00
H/W Reset	8’h00

5.2.9. Read Display Self-Diagnostic Result(0FH)

0FH		RDDSDR（Read Display Self-Diagnostic Result）								
	Write/Read	D7	D6	D5	D4	D3	D2	D1	D0	Default
Command	Write	0	0	0	0	1	1	1	1	0FH
Parameter	Read	regld	fundt	0	0	0	0	0	0	00h
Description	regld =1,when the OTP and register values are the same. fundt =1,when the chip met User's functionality requirements.									
Restriction	-									
Register Availability										

Status	Availability
Normal Mode On,Sleep Out	Yes
Sleep Out	Yes
Sleep In	Yes

Default	

Status	Default Value
Power On Sequence	8'h00
S/W Reset	8'h00
H/W Reset	8'h00

5.2.10. Sleep In(10h)

10H		SLPIN (Sleep In)								
	Write/Read	D7	D6	D5	D4	D3	D2	D1	D0	Default
Command	Write	0	0	0	1	0	0	0	0	10H
Parameter	-	No Parameter								-
Description	This command cause the NV3052CGRB to enter the minimum power consumption mode. In this mode the NV3052CGRB control signals,Internal oscillator and panel scanning are stopped.									
Restriction	This command has no effect when module is already in Sleep In mode. Sleep In Mode can only be left by the Sleep Out command. It is necessary to wait 5msec before sending the next command; this is to allow time for the supply voltages and clock circuits to stabilize. It is necessary to wait 120msec after sending Sleep Out command(when in Sleep In Mode)before the Sleep In command can be sent.									
Register Availability										

Status	Availability
Normal Mode On,Sleep Out	Yes
Sleep Out	Yes
Sleep In	Yes

Default

Status	Default Value
Power On Sequence	Sleep In Mode
S/W Reset	Sleep In Mode
H/W Reset	Sleep In Mode

5.2.11. Sleep Out(11H)

11H		SLPOUT (Sleep Out)								
	Write/Read	D7	D6	D5	D4	D3	D2	D1	D0	Default
Command	Write	0	0	0	1	0	0	0	1	11H
Parameter	-	No Parameter								-
Description	This command turns off sleep mode. In this mode ,the NV3052CGRB control signals,Internal oscillator and panel scanning are started.									
Restriction	This command has no effect when module is already in Sleep Out mode. Sleep Out mode can be left by the Sleep In command(10h), S/W reset command (01h) or H/W reset. It is necessary to wait 5msec before sending next command; this is to allow time for the supply voltages and clock circuits to stabilize. The NV3052CGRB loads all display supplier's factory default values to the registers during this 5msec and there cannot be any abnormal visual effect on the display image if factory default and register values are same when this load is done and when the NV3052CGRB is already Sleep Out mode.During this 5msec, NV3052CGRB is running self-diagnostic functions. It is necessary to wait 120msec after sending the Sleep In command (when in Sleep Out mode) before the Sleep Out command can be sent.									
Register Availability										

Status	Availability
Normal Mode On,Sleep Out	Yes
Sleep Out	Yes
Sleep In	Yes

Default										

Status	Default Value
Power On Sequence	Sleep In Mode
S/W Reset	Sleep In Mode
H/W Reset	Sleep In Mode

5.2.12. Normal Display Mode On(13H)

13H		NORON (Normal Display Mode On)								
	Write/Read	D7	D6	D5	D4	D3	D2	D1	D0	Default
Command	Write	0	0	0	1	0	0	1	1	13H
Parameter	-	No Parameter								-
Description	This command returns the display to Normal Display Mode.									
Restriction	This command has no effect when Normal Display Mode is active.									
Register Availability										

Status	Availability
Normal Mode On,Sleep Out	Yes
Sleep Out	Yes
Sleep In	Yes

Default

Status	Default Value
Power On Sequence	Normal Display Mode On.
S/W Reset	Normal Display Mode On.
H/W Reset	Normal Display Mode On.

5.2.13. Display Inversion Off(20H)

20H	INVOFF (Display Inversion Off)									
	Write/Read	D7	D6	D5	D4	D3	D2	D1	D0	Default
Command	Write	0	0	1	0	0	0	0	0	20H
Parameter	-	No Parameter								-
Description	This command is used to recover from display inversion On mode. This command does not change any other status. 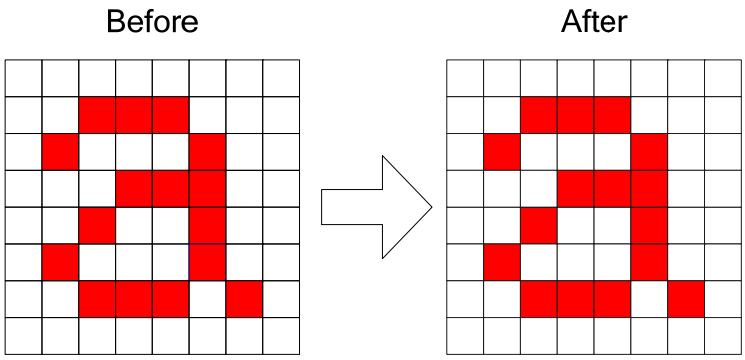 									
Restriction	This command has no effect when module is already in Display Inversion Off mode.									
Register Availability										

Status	Availability
Normal Mode On,Sleep Out	Yes
Sleep Out	Yes
Sleep In	Yes

Default	
Status	Default Value
Power On Sequence	Display Inversion Off
S/W Reset	Display Inversion Off
H/W Reset	Display Inversion Off

5.2.14. Display Inversion On(21H)

21H	INVON (Display Inversion On)									
	Write/Read	D7	D6	D5	D4	D3	D2	D1	D0	Default
Command	Write	0	0	1	0	0	0	0	1	21H
Parameter	-	No Parameter								-
Description	This command is used to enter into Display Inversion On mode. This command does not change any other status. To exit Display Inversion On mode,the Display Inversion Off command(20h)should be written. 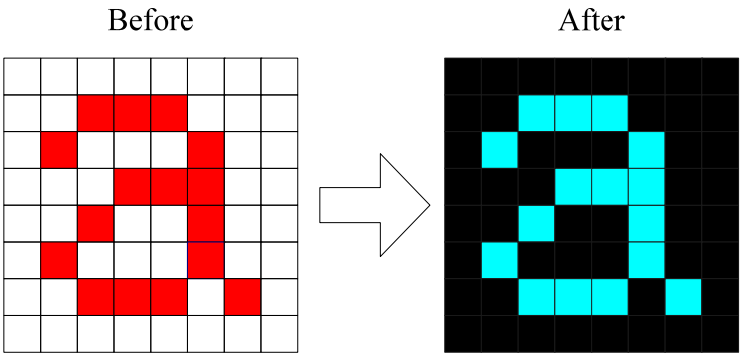									
Restriction	This command has no effect when the NV3052CGRB is already in Inversion On mode.									
Register Availability										

Status	Availability
Normal Mode On,Sleep Out	Yes
Sleep Out	Yes
Sleep In	Yes

Default	
Status	Default Value
Power On Sequence	Display Inversion Off
S/W Reset	Display Inversion Off
H/W Reset	Display Inversion Off

5.2.15. All Pixel Off(22H)

22H		ALLPOFF (All Pixels Off)								
	Write/Read	D7	D6	D5	D4	D3	D2	D1	D0	Default
Command	Write	0	0	1	0	0	0	1	0	22H
Parameter	-	No Parameter								-

Description

This command turns the display panel black in 'Sleep Out' mode and a status of the 'Display On/Off' register can be 'on' or 'off'.

This command does not change any other status.

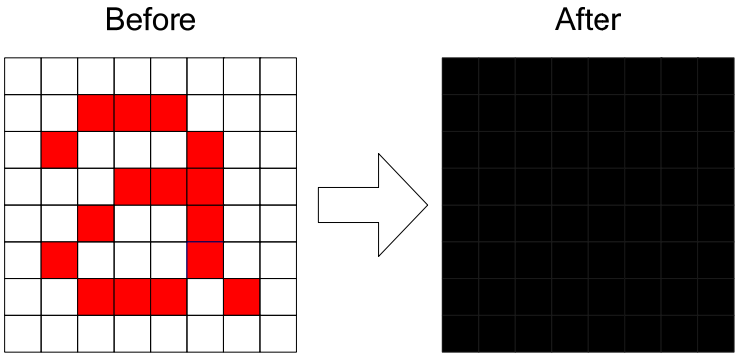

'All Pixels On','Normal Display Mode On'commands are used to leave this mode.

0:normal display

1:NB screen:nom_black = 0,black display;nom_black = 1,white display

NW screen:nom_black = 0,white display;nom_black = 1,black display

Restriction

This command has no effect when the NV3052CGRB is already in All Pixels Off mode.

Register Availability

Status	Availability
Normal Mode On,Sleep Out	Yes
Sleep Out	Yes
Sleep In	Yes

Default

Status	Default Value
Power On Sequence	Off
S/W Reset	Off
H/W Reset	Off

5.2.16. All Pixels On(23H)

23H		ALLPON (All Pixels On)								
	Write/Read	D7	D6	D5	D4	D3	D2	D1	D0	Default
Command	Write	0	0	1	0	0	0	1	1	23H
Parameter	-	No Parameter								-

Description

This command turns the display panel white in 'Sleep out ' mode and a status of the 'Display On/Off' register can be 'on' or 'off'.This command does not change any other status.

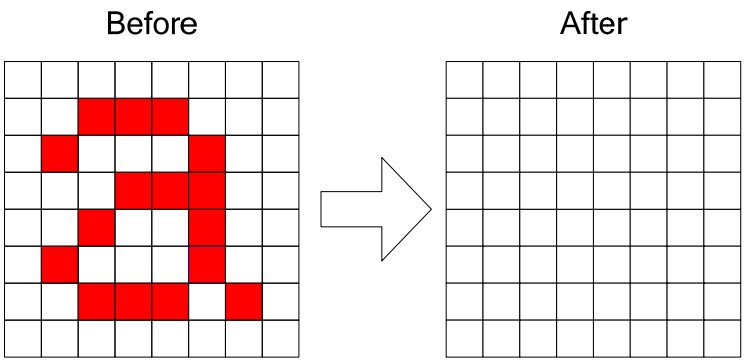

'All Pixels Off', 'Normal Display Mode On'commands are used to leave this mode.

0:normal display.

1:NB screen:nom_black = 0,white display;nom_black = 1,black display.

NW screen:nom_black = 0,black display;nom_black = 1,white display.

Restriction

This command has no effect when the NV3052CGRB is already in All Pixels On mode.

Register Availability

Status	Availability
Normal Mode On,Sleep Out	Yes
Sleep Out	Yes
Sleep In	Yes

Default

Status	Default Value
Power On Sequence	Off
S/W Reset	Off
H/W Reset	Off

5.2.17. Display Off(28H)

28H		DISOFF (Display Off)								
	Write/Read	D7	D6	D5	D4	D3	D2	D1	D0	Default
Command	Write	0	0	1	0	1	0	0	0	28H
Parameter	-	No Parameter								-
Description	This command is used to enter into Display Off mode. In this mode, the output data is disabled and blank page is inserted. This command makes no change any other status. There will be no abnormal visible effect on the display. 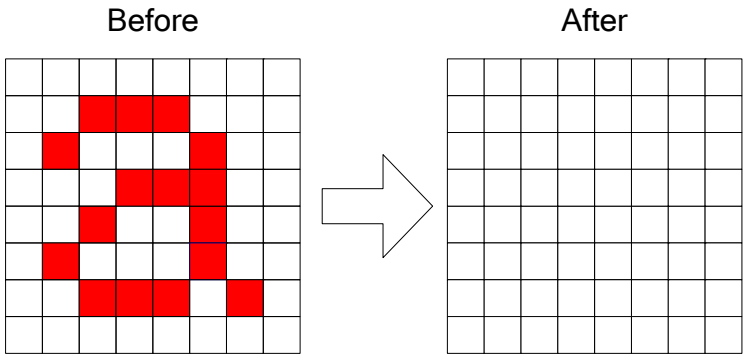 									
Restriction	This command has no effect when module is already in Display Off mode.									
Register Availability										

Status	Availability
Normal Mode On,Sleep Out	Yes
Sleep Out	Yes
Sleep In	Yes

Default	
Status	Default Value
Power On Sequence	Display off
S/W Reset	Display off
H/W Reset	Display off

5.2.18. Display On(29H)

29H		DISON (Display On)								
	Write/Read	D7	D6	D5	D4	D3	D2	D1	D0	Default
Command	Write	0	0	1	0	1	0	0	1	29H
Parameter	-	No Parameter								-
Description	This command is used to recover from Display Off mode. Output data is enabled. This command does not change any other status. 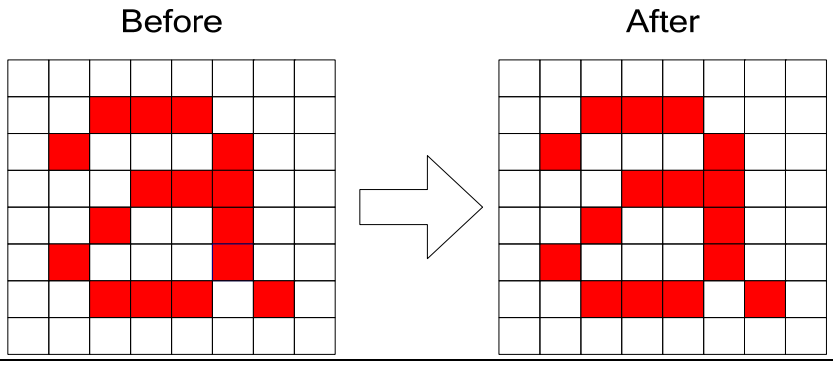									
Restriction	This command has no effect when the NV3052CGRB is already in Display on mode.									
Register Availability										

Status	Availability
Normal Mode On,Sleep Out	Yes
Sleep Out	Yes
Sleep In	Yes

Default	
Status	Default Value
Power On Sequence	Display off
S/W Reset	Display off
H/W Reset	Display off

5.2.19. Tearing Effect Line OFF(34H)

34H		TEOFF (Tearing Effect Line OFF)								
	Write/Read	D7	D6	D5	D4	D3	D2	D1	D0	Default
Command	Write	0	0	1	1	0	1	0	0	34H
Parameter	-	No Parameter								-
Description	This command is used to turn off the Display module's Tearing Effect output signal(Active Low) from the TE signal line.									
Restriction	This command has no effect when the Tearing Effect output is already off.									
Register Availability										

Status	Availability
Normal Mode On,Sleep Out	Yes
Sleep Out	Yes
Sleep In	Yes

Default	
Status	Default Value
Power On Sequence	Tearing Effect Line Off
S/W Reset	Tearing Effect Line Off
H/W Reset	Tearing Effect Line Off

5.2.20. Tearing Effect Line ON(35H)

35H		TEON (Tearing Effect Line On)								
	Write/Read	D7	D6	D5	D4	D3	D2	D1	D0	Default
Command	Write	0	0	1	1	0	1	0	1	35H
Parameter	-	No Parameter							tear_mode	00H
Description	This command is used to turn on the Tearing Effect output signal from the TE signal line. tear_mode:describes the mode of the Tearing Effect Output Line. Tearing Effect Line mode. 0:The Tearing Effect Output line consists of V-Blanking information only. 1:The Tearing Effect Output line consists of both V-Blanking and H-Blanking information.									
Restriction	This command has no effect when the Tearing Effect output is already on.									
Register Availability										

Status	Availability
Normal Mode On,Sleep Out	Yes
Sleep Out	Yes
Sleep In	Yes

Default	
Power On Sequence	Tearing Effect Line Off
S/W Reset	Tearing Effect Line Off
H/W Reset	Tearing Effect Line Off

5.2.21. Display Access Control(36H)

36H		MADCTR (Display Access Control)								
	Write/Read	D7	D6	D5	D4	D3	D2	D1	D0	Default
Command	Write	0	0	1	1	0	1	1	0	36H
Parameter	Write	0	0	0	0	bgr	0	ss	gs	00H

Description

This command defines the panel operation mode.

SYMBOL	NAME	DESCRIPTION
bgr	Pannel RGB-BGR Order.	Color selector switch control. (0' =RGB color filter panel, '1' =BGR color filter panel)
ss	Panel Flip Horizontal.	Select the source driver scan direction on the panel module.（SS="1" Source Scan sequence from right to left, '0' = Source Scan sequence from left to right）
gs	Panel Flip Vertical.	Select the gate driver scan direction on panel module. （GS="1" Gate Scan sequence from bottom to top, '0' = Gate Scan sequence from top to bottom）

Note:gs scan direction depend on panel's design. Top-Left(0,0) means the physical panel location.

Restriction

-

Register Availability

Status	Availability
Normal Mode On,Sleep Out	Yes
Sleep Out	Yes
Sleep In	Yes

Default

Status	Default Value
Power On Sequence	8'h00
S/W Reset	8'h00
H/W Reset	8'h00

5.2.22. Idle Mode Off(38H)

38H		IDMODEOFF (Idle Mode Off)								
	Write/Read	D7	D6	D5	D4	D3	D2	D1	D0	Default
Command	Write	0	0	1	1	1	0	0	0	38H
Parameter	-	No Parameter								-
Description	This command causes the Display module to exit the Idle mode. In the Idle Mode Off, the display panel can display a maximum of 16.7M colors.									
Restriction	This command has no effect when the module is already in the Idle Mode Off.									
Register Availability										

Status	Availability
Normal Mode On,Idle Mode Off,Sleep Out	Yes
Normal Mode On,Idle Mode On,Sleep Out	Yes
Sleep In	Yes

Default	
Status	Default Value
Power On Sequence	Idle Mode Off
S/W Reset	Idle Mode Off
H/W Reset	Idle Mode Off

5.2.23. Idle mode on and other mode off (39H)

39H		IDMODEON (Idle mode on and other mode off)								
	Write/Read	D7	D6	D5	D4	D3	D2	D1	D0	Default
Command	Write	0	0	1	1	1	0	0	1	39H
Parameter	-	No Parameter								-
Description	This command is used to enter into the Idle Mode On. In the Idle Mode On, color expression is reduced.									
Restriction	This command has no effect when the module is already in the Idle Mode On.									
Register Availability										

Status	Availability
Normal Mode On, Idle Mode Off, Sleep Out	Yes
Normal Mode On, Idle Mode On, Sleep Out	Yes
Sleep In	Yes

Default

Status	Default Value
Power On Sequence	Idle Mode Off
S/W Reset	Idle Mode Off
H/W Reset	Idle Mode Off

5.2.24. Interface Pixel Format(3AH)

3AH		COLMOD (Interface Pixel Format)								
	Write/Read	D7	D6	D5	D4	D3	D2	D1	D0	Default
Command	Write	0	0	1	1	1	0	1	0	3AH
Parameter	Write	0	dpi[2:0]			0	0	0	0	70H

Description

This command sets the pixel format. dpi[2:0] selects the pixel format of RGB data.

dpi[2:0]			Interface Format
1	0	1	16-bit pixel
1	1	0	18-bit pixel
1	1	1	24-bit pixel

Restriction

-

Register Availability

Status	Availability
Normal Mode On,Sleep Out	Yes
Sleep Out	Yes
Sleep In	Yes

Default

Status	Default Value
Power On Sequence	8’h70
S/W Reset	8’h70
H/W Reset	8’h70

5.2.25. Write Tear Scan Line(44H)

44H		WRTESCN (Write Tear Scan Line)								
	Write/Read	D7	D6	D5	D4	D3	D2	D1	D0	Default
Command	Write	0	1	0	0	0	1	0	0	44H
Parameter	Write	te_on_lines[7:0]								00H
Description	This command turns on the display module's TE signal when the display module reaches line te_on_lines[7:0].									
Restriction	The command takes affect with the end of one frame.									
Register Availability										

Status	Availability
Normal Mode On,Sleep Out	Yes
Sleep Out	Yes
Sleep In	Yes

Status	Default Value
Power On Sequence	8'h00
S/W Reset	8'h00
H/W Reset	8'h00

5.2.26. Read Scan Line(45H)

45H		RDSCNL(Read Scan Line)								
	Write/Read	D7	D6	D5	D4	D3	D2	D1	D0	Default
Command	Write	0	1	0	0	0	1	0	1	45H
Parameter	Read	te_on_lines[7:0]								00H
Description	This read byte returns the current scan line.									
Restriction	-									
Register Availability										

Status	Availability
Normal Mode On,Sleep Out	Yes
Sleep Out	Yes
Sleep In	Yes

Default

Status	Default Value
Power On Sequence	8’h00
S/W Reset	8’h00
H/W Reset	8’h00

5.2.27. Write Tear Scan Line Width(46H)

46H		WRTEWIDTH(Write Tear Scan Line Width)								
	Write/Read	D7	D6	D5	D4	D3	D2	D1	D0	Default
Command	Write	0	1	0	0	0	1	1	0	46H
Parameter	Write	te_width[7:0]								00H
Description	Set the width of TE scan line.									
Restriction	-									
Register Availability										

Status	Availability
Normal Mode On,Sleep Out	Yes
Sleep Out	Yes
Sleep In	Yes

Default	

Status	Default Value
Power On Sequence	8’h00
S/W Reset	8’h00
H/W Reset	8’h00

5.2.28. Read Tear Scan Line Width(47H)

47H		RDTEWIDTH(Read Tear Scan Line Width)								
	Write/Read	D7	D6	D5	D4	D3	D2	D1	D0	Default
Command	Write	0	1	0	0	0	1	1	1	47H
Parameter	Read	te_width[7:0]								00H
Description	Read the width of TE scan line.									
Restriction	-									
Register Availability										

Status	Availability
Normal Mode On,Sleep Out	Yes
Sleep Out	Yes
Sleep In	Yes

Default	
Default	

Status	Default Value
Power On Sequence	8’h00
S/W Reset	8’h00
H/W Reset	8’h00

5.2.29. Write Display Brightness Value(51H)

51H		WRDISBV(Write Display Brightness)								
	Write/Read	D7	D6	D5	D4	D3	D2	D1	D0	Default
Command	Write	0	1	0	1	0	0	0	1	51H
Parameter	Write	dbv[7:0]								00H
Description	This command is used to adjust the brightness value of the display. dbv[7:0]:8-bit,for display brightness of manual brightness setting in the NV3052CGRB.PWM output signal sends to LEDPWM pin to control the LED driver IC in order to control display brightness.									
Restriction	-									
Register Availability										

Status	Availability
Normal Mode On,Sleep Out	Yes
Sleep Out	Yes
Sleep In	Yes

Default

Status	Default Value
Power On Sequence	8’h00
S/W Reset	8’h00
H/W Reset	8’h00

5.2.30. Read Display Brightness Value(52h)

52H		RDDISBV(Read Display Brightness Value)								
	Write/Read	D7	D6	D5	D4	D3	D2	D1	D0	Default
Command	Write	0	1	0	1	0	0	1	0	52H
Parameter	Read	dbv[7:0]								00H
Description	This command is used to return the brightness value of the display. dbv[7:0] is reset when display is in Sleep in mode. dbv[7:0] is ‘0’when bit bctrl of “Write CTRL Display(53h)”command is “0”. dbv[7:0] is manual set brightness specified with “Write CTRL Display(53h)”command when bctrl bit is ‘1’. When bit bctrl of “Write CTRL Display(53h)”command is ‘1’or write SLPIN(10h) command, dbv[7:0] output is the brightness value specified with “Write Display Brightness(51h)”command.									
Restriction	-									
Register Availability										

Status	Availability
Normal Mode On,Sleep Out	Yes
Sleep Out	Yes
Sleep In	Yes

Default	
Status	Default Value
Power On Sequence	8’h00
S/W Reset	8’h00
H/W Reset	8’h00

5.2.31. Write CTRL Display Value(53H)

53H		WRCTRLD(Write CTRL Display)								
	Write/Read	D7	D6	D5	D4	D3	D2	D1	D0	Default
Command	Write	0	1	0	1	0	0	1	1	53H
Parameter	Write	0	0	bctrl	0	disp_dim	backlight _on	0	0	00H

Description

This command is used to control display brightness.

bctrl:Brightness Control Black On/Off. This bit is always used to switch brightness for display.

bctrl	Description
0	Brightness Control Black Off(dbv[7:0]=00h)
1	Brightness Control Black On(dbv[7:0] is active)

disp_dim:Display Dimming Control. This function is only for manual brightness setting.

disp_dim	Description
0	Display Dimming Off.
1	Display Dimming On.

backlight_on:Backlight Control On/Off.

backlight_on	Description
0	Backlight Control Off.
1	Backlight Control On.

Dimming function is adapted to the brightness registers for display when bit bctrl is changed at disp_dim =1,e.g.bctrl:0→1 or 1 → 0.

When backlight_on bit change from “On” to “Off”,backlight is turned off without gradual dimming,even if Display Dimming On(disp_dim=1) are selected.

Restriction

-

Register Availability

Status	Availability
Normal Mode On,Sleep Out	Yes
Sleep Out	Yes
Sleep In	Yes

Default	

Status	Default Value
Power On Sequence	8’h00
S/W Reset	8’h00
H/W Reset	8’h00

5.2.32. Read CTRL Display Value(54H)

54H		RDCTRLD(Read CTRL Display Value)								
	Write/Read	D7	D6	D5	D4	D3	D2	D1	D0	Default
Command	Write	0	1	0	1	0	1	0	0	54H
Parameter	Read	0	0	bctrl	0	disp_dim	backlight_on	0	0	00H
Description	This command is used to read the control status of display brightness. bctrl: display brightness control. backlight_on: backlight control. disp_dim: display dimming control.									
Restriction	-									
Register Availability										
Default										

Status	Availability
Normal Mode On,Sleep Out	Yes
Sleep Out	Yes
Sleep In	Yes

Status	Default Value
Power On Sequence	8’h00
S/W Reset	8’h00
H/W Reset	8’h00

5.2.33. Read Display ID1(DAH)

DAH	RDID1(Read Display ID1)									
	Write/Read	D7	D6	D5	D4	D3	D2	D1	D0	Default
Command	Write	1	1	0	1	1	0	1	0	DAH
Parameter	Read	id1								30h
Description	This read byte is used to track the LCD module/driver version. It is defined by the display supplier (with User's agreement) and changes each time a revision is made to the display, material or construction specifications. The parameter is LCD module's manufacturer ID. The id1 is programmed by OTP function.									
Restriction	-									
Register Availability										

Status	Availability
Normal Mode On,Sleep Out	Yes
Sleep Out	Yes
Sleep In	Yes

5.2.34. Read Display ID2(DBH)

DBH		RDID2(Read Display ID2)								
	Write/Read	D7	D6	D5	D4	D3	D2	D1	D0	Default
Command	Write	1	1	0	1	1	0	1	1	DBH
Parameter	Read	id2								52h
Description	This read byte is used to track the LCD module/driver version. It is defined by the display supplier (with User's agreement) and changes each time a revision is made to the display, material or construction specifications. The parameter is LCD module/driver version ID. The id2 is programmed by OTP function.									
Restriction	-									
Register Availability										
Default										

Status	Availability
Normal Mode On,Sleep Out	Yes
Sleep Out	Yes
Sleep In	Yes

Status	Default Value (Before OTP program)	Default Value (Before OTP program)
Power On Sequence	8'h52	OTP value
H/W Reset	8'h52	OTP value

5.2.35. Read Display ID3(DCH)

DCH		RDID3(Read ID3)								
	Write/Read	D7	D6	D5	D4	D3	D2	D1	D0	Default
Command	Write	1	1	0	1	1	1	0	0	DCH
Parameter	Read	id3								01H
Description	This read byte is used to track the LCD module/driver version. It is defined by the display supplier (with User's agreement) and changes each time a revision is made to the display, material or construction specifications. The parameter is LCD module/driver version ID. The id3 is programmed by OTP function.									
Restriction	-									
Register Availability										

Status	Availability
Normal Mode On,Sleep Out	Yes
Sleep Out	Yes
Sleep In	Yes

Default

Status	Default Value (Before OTP program)	Default Value (Before OTP program)
Power On Sequence	8'h01	OTP value
H/W Reset	8'h01	OTP value

5.2.36. Read EXTC Command In SPI Mode(F8H)

F8H		RDEXTCSPI（Read EXTC Command In SPI）								
	Write/Read	D7	D6	D5	D4	D3	D2	D1	D0	Default
Command	Write	1	1	1	1	1	0	0	0	F8H
Parameter	Write	ext_spi_re	0	0	0	0	0	0	0	00H

Description

ext_spi_re: enable the read function of Custom Command in SPI operation mode.

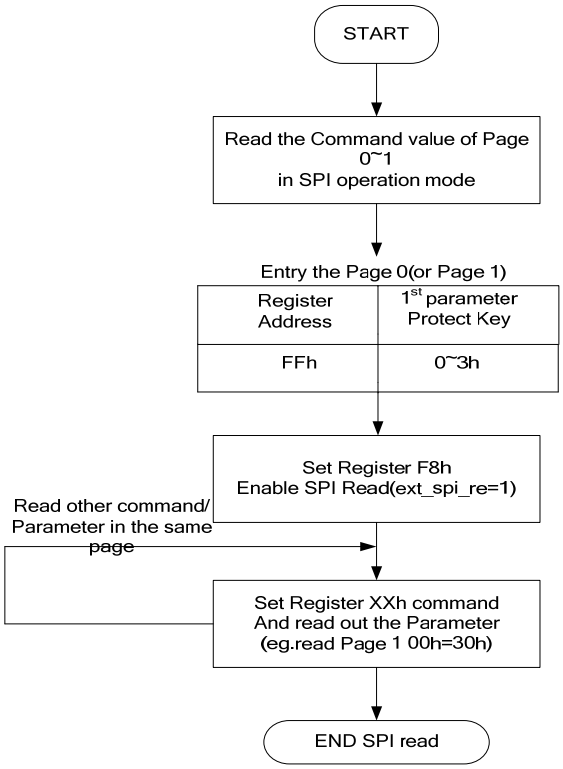

Restriction: -

Register Availability

Status	Availability
Normal Mode On,Sleep Out	Yes
Sleep Out	Yes
Sleep In	Yes

Default	

Status	Default Value
Power On Sequence	8’h00
S/W Reset	8’h00
H/W Reset	8’h00

5.2.37. EXTC Command Set enable register (FFH)

FFh		ENEXTC (EXTC Command Set Enable Register)								
	Write/Read	D7	D6	D5	D4	D3	D2	D1	D0	Default
Command	Write	1	1	1	1	1	1	1	1	FFH
Parameter	Write	0	0	0	0	0	0	page[1:0]		00H
Description	Config page. Write three times. The first time write 30h, the second time write 52h, the last time write page[1:0]									
Restriction	-									
Register Availability										
Default										

page	Descriptions
00	select page0
01	select page1
10	select page2
11	select page3

Status	Availability
Normal Mode On,Sleep Out	Yes
Sleep Out	Yes
Sleep In	Yes

Status	Default Value
Power On Sequence	8’h00
S/W Reset	8’h00
H/W Reset	8’h00

Customer Command List

Page 1 command													
Instruction	DCX	WRX	RDX	D7	D6	D5	D4	D3	D2	D1	D0	Hex	Function
WRMADC_EN	0	↑	1	0	0	0	0	1	0	1	0	0Ah	wrmadc_en
	1	↑	1	0	0	1	1	1	1	r36_en	1	ffh	-
RGB interface control	0	↑	1	0	0	1	0	0	0	1	1	23h	interface_ctrl
	1	↑	1	0	0	sync_mode[1:0]		vspl	hspl	dpl	epl	00h	-
VCOM_ADJ1	0	↑	1	0	0	1	1	1	0	0	0	38h	vcom_adj
	1	↑	1	vap								dch	-
VCOM_ADJ2	0	↑	1	0	0	1	1	1	0	0	1	39h	vcom_adj
	1	↑	1	van								57h	-
VCOM_ADJ3	0	↑	1	0	0	1	1	1	0	1	0	3Ah	vcom_adj
	1	↑	1	vcom_adj								41h	-
PADCTRL1	0	↑	1	0	1	0	0	1	0	0	0	48h	pad_ctrl
	1	↑	1	0	0	vcom_hiz	0	sdo_oe	ledpwm_oe	te_oe	te1_oe	0fh	-
BOOST_CTRL1	0	↑	1	1	0	0	0	0	0	0	0	80h	pump_ctrl
	1	↑	1	0	boostm_sel	boostm[1:0]		clp_opt	boostm_opt[2:0]			18h	-
BOOST_CTRL2	0	↑	1	1	0	0	0	0	0	0	1	81h	pump_ctrl
	1	↑	1	0	fix_duty_n	drvn[1:0]		0	fix_duty_p	drvp[1:0]		11h	-
BOOST_CTRL3	0	↑	1	1	0	0	0	0	0	1	0	82h	pump_ctrl
	1	↑	1	0	0	0	vsp_sel[4:0]					1ah	-
BOOST_CTRL4	0	↑	1	1	0	0	0	0	0	1	1	83h	pump_ctrl
	1	↑	1	0	0	0	vsn_sel[4:0]					1ah	-
	1	↑	1	0	vsn_clp_nor[2:0]			smp_n	vsn_clp_blk[2:0]			44h	-
EXTPW_CTRL1	0	↑	1	1	0	0	1	0	0	0	0	90h	pump_ctrl
	1	↑	1	ext_clkp_mode	ext_clkn_mode	1	0	ext_dm_nor[1:0]		ext_dm_pwr[1:0]		E5h	-
EXTPW_CTRL2	0	↑	1	1	0	0	1	0	0	0	1	91h	pump_ctrl
	1	↑	1	0	ext_clkp_nor_width[2:0]			0	ext_clkp_pwr_width[2:0]			44h	-
EXTPW_CTRL3	0	↑	1	1	0	0	1	0	0	1	0	92h	pump_ctrl
	1	↑	1	0	ext_clkn_nor_width[2:0]			0	ext_clkn_pwr_width[2:0]			44h	-
PUMP_CTRL1	0	↑	1	1	0	0	1	1	0	0	0	98h	pump_ctrl
	1	↑	1	vgh_cmp_en	vgh_amp_en	vgh_sync	0	pump_ss_width[1:0]		vgh_sel[1:0]		4ah	-

Page 1 command													
Instruction	DCX	WRX	RDX	D7	D6	D5	D4	D3	D2	D1	D0	Hex	Function
PUMP_CTRL2	0	↑	1	1	0	0	1	1	0	0	1	99h	pump_ctrl
	1	↑	1	vgh_clk_sel[3:0]				vgh_clamp[3:0]				54h	-
PUMP_CTRL3	0	↑	1	1	0	0	1	1	0	1	0	9Ah	pump_ctrl
	1	↑	1	vgl_cmp_en	vgl_amp_en	vgl_sync	0	0	0	vgl_sel[1:0]		41h	-
PUMP_CTRL4	0	↑	1	1	0	0	1	1	0	1	1	9Bh	pump_ctrl
	1	↑	1	vgl_clk_sel[3:0]				vgl_clamp[3:0]				56h	-
RDEXTCSPI	0	↑	1	1	1	1	1	1	0	0	0	F8h	page_ctrl
	1	↑	1	ext_spi_re	0	0	0	0	0	0	0	00h	-
ENEXTC	0	↑	1	1	1	1	1	1	1	1	1	FFh	EXTC Command Set Enable Register
	1	↑	1	0	0	0	0	0	0	page[1:0]		00h	-

5.3. Customer Command List and Description

5.3.1. WRMADC_EN:0Ah

Address	WRMADC_EN								
Parameter Address	D7	D6	D5	D4	D3	D2	D1	D0	Default
0aH	0	0	1	1	1	1	r36_en	1	ffH
Description	r36_en:write MADCTL(36h) command enable signal. “0”:enable. “1”:disable.								

5.3.2. RGB interface control:23h

Address	RGB interface control								
Parameter Address	D7	D6	D5	D4	D3	D2	D1	D0	Default
23H	0	0	sync_mode[1:0]		vspl	hspl	dpl	epl	00H

Description

Set the operation status of display interface.The setting becomes effective as soon as the command is setted.

Bit	Description	Value	Comment
vspl	VS polarity	0	Low level sync clock
		1	High level sync clock
hspl	HS polarity	0	Low level sync clock
		1	High level sync clock
dpl	PCLK polarity	0	Data fetched at the rising time
		1	Data fetched at the falling time
epl	DE polarity	0	High enable for RGB interface
		1	Low enable for RGB interface

sync_mode[1:0]:RGB interface enable mode selection.

sync_mode[1:0]	RGB Mode
00	SYNC+DE mode
01	SYNC mode
10	DE mode
11	SYNC+DE mode

5.3.3. vcom_adj:38H～3Ah

Address	vcom_adj								
Parameter Address	D7	D6	D5	D4	D3	D2	D1	D0	Default
38h	vap_adj								dcH
39h	van_adj								57H
3ah	vcom_adj								41H

Description

vap_adj: Set the output voltage for VGMP. The real value which send to VGMP is vap_adj + vap_offset.

vap_adj[7:0] (Hex)	VGMP (V)	vap_adj[7:0] (Hex)	VGMP (V)	vap_adj[7:0] (Hex)	VGMP (V)	vap_adj[7:0] (Hex)	VGMP (V)
00H	2.64	10H	2.842	20H	3.043	30H	3.244
01H	2.653	11H	2.854	21H	3.055	31H	3.257
02H	2.666	12H	2.867	22H	3.068	32H	3.269
03H	2.678	13H	2.879	23H	3.08	33H	3.282
04H	2.691	14H	2.892	24H	3.093	34H	3.294
05H	2.703	15H	2.904	25H	3.106	35H	3.307
06H	2.716	16H	2.917	26H	3.118	36H	3.319
07H	2.728	17H	2.93	27H	3.131	37H	3.332
08H	2.741	18H	2.942	28H	3.143	38H	3.345
09H	2.754	19H	2.955	29H	3.156	39H	3.357
0AH	2.766	1AH	2.967	2AH	3.168	3AH	3.37
0BH	2.779	1BH	2.98	2BH	3.181	3BH	3.382
0CH	2.791	1CH	2.992	2CH	3.194	3CH	3.395
0DH	2.804	1DH	3.005	2DH	3.206	3DH	3.407
0EH	2.816	1EH	3.018	2EH	3.219	3EH	3.42
0FH	2.829	1FH	3.03	2FH	3.231	3FH	3.433

vap_adj[7:0] (Hex)	VGMP (V)	vap_adj[7:0] (Hex)	VGMP (V)	vap_adj[7:0] (Hex)	VGMP (V)	vap_adj[7:0] (Hex)	VGMP (V)
40H	3.445	50H	3.646	60H	3.848	70H	4.049
41H	3.458	51H	3.659	61H	3.86	71H	4.062
42H	3.47	52H	3.672	62H	3.873	72H	4.075
43H	3.483	53H	3.684	63H	3.886	73H	4.087
44H	3.495	54H	3.697	64H	3.898	74H	4.1
45H	3.508	55H	3.709	65H	3.911	75H	4.112
46H	3.521	56H	3.722	66H	3.923	76H	4.125
47H	3.533	57H	3.735	67H	3.936	77H	4.138
48H	3.546	58H	3.747	68H	3.949	78H	4.15
49H	3.558	59H	3.76	69H	3.961	79H	4.163
4AH	3.571	5AH	3.772	6AH	3.974	7AH	4.176
4BH	3.584	5BH	3.785	6BH	3.986	7BH	4.188
4CH	3.596	5CH	3.797	6CH	3.999	7CH	4.201
4DH	3.609	5DH	3.81	6DH	4.012	7DH	4.213
4EH	3.621	5EH	3.823	6EH	4.024	7EH	4.226
4FH	3.634	5FH	3.835	6FH	4.037	7FH	4.239

vap_adj[7:0] (Hex)	VGMP (V)	vap_adj[7:0] (Hex)	VGMP (V)	vap_adj[7:0] (Hex)	VGMP (V)	vap_adj[7:0] (Hex)	VGMP (V)
80H	4.251	90H	4.454	A0H	4.655	B0H	4.856
81H	4.264	91H	4.466	A1H	4.668	B1H	4.868
82H	4.277	92H	4.479	A2H	4.68	B2H	4.881
83H	4.289	93H	4.492	A3H	4.693	B3H	4.894
84H	4.302	94H	4.504	A4H	4.705	B4H	4.906
85H	4.314	95H	4.517	A5H	4.718	B5H	4.919
86H	4.327	96H	4.529	A6H	4.73	B6H	4.931
87H	4.34	97H	4.542	A7H	4.743	B7H	4.944
88H	4.352	98H	4.555	A8H	4.756	B8H	4.956
89H	4.365	99H	4.567	A9H	4.768	B9H	4.969
8AH	4.378	9AH	4.58	AAH	4.781	BAH	4.981
8BH	4.39	9BH	4.592	ABH	4.793	BBH	4.994
8CH	4.403	9CH	4.605	ACH	4.806	BCH	5.006
8DH	4.416	9DH	4.618	ADH	4.818	BDH	5.019
8EH	4.428	9EH	4.63	AEH	4.831	BEH	5.031
8FH	4.441	9FH	4.643	AFH	4.843	BFH	5.044

vap_adj[7:0] (Hex)	VGMP (V)	vap_adj[7:0] (Hex)	VGMP (V)	vap_adj[7:0] (Hex)	VGMP (V)	vap_adj[7:0] (Hex)	VGMP (V)
C0H	5.057	D0H	5.257	E0H	5.458	F0H	5.659
C1H	5.069	D1H	5.27	E1H	5.471	F1H	5.671
C2H	5.082	D2H	5.282	E2H	5.483	F2H	5.684
C3H	5.094	D3H	5.295	E3H	5.496	F3H	5.696
C4H	5.107	D4H	5.307	E4H	5.508	F4H	5.709
C5H	5.119	D5H	5.32	E5H	5.521	F5H	5.721
C6H	5.132	D6H	5.333	E6H	5.533	F6H	5.734
C7H	5.144	D7H	5.345	E7H	5.546	F7H	5.746
C8H	5.157	D8H	5.358	E8H	5.558	F8H	5.759
C9H	5.169	D9H	5.37	E9H	5.571	F9H	5.771
CAH	5.182	DAH	5.383	EAH	5.583	FAH	5.784
CBH	5.195	DBH	5.395	EBH	5.596	FBH	5.796
CCH	5.207	DCH	5.408	ECH	5.609	FCH	5.809
CDH	5.22	DDH	5.42	EDH	5.621	FDH	5.821
CEH	5.232	DEH	5.433	EEH	5.634	FEH	5.834
CFH	5.245	DFH	5.445	EFH	5.646	FFH	5.846

van_adj: Set the output voltage for VGMN. The real value which send to VGMN is van_adj + van_offset.

van_adj[7:0] (Hex)	VGMN (V)	van_adj[7:0] (Hex)	VGMN (V)	van_adj[7:0] (Hex)	VGMN (V)	van_adj[7:0] (Hex)	VGMN (V)
00H	-2.509	10H	-2.709	20H	-2.91	30H	-3.11
01H	-2.522	11H	-2.722	21H	-2.922	31H	-3.122
02H	-2.534	12H	-2.734	22H	-2.935	32H	-3.135
03H	-2.547	13H	-2.747	23H	-2.947	33H	-3.147
04H	-2.559	14H	-2.759	24H	-2.96	34H	-3.16
05H	-2.572	15H	-2.772	25H	-2.972	35H	-3.173
06H	-2.584	16H	-2.784	26H	-2.985	36H	-3.185
07H	-2.597	17H	-2.797	27H	-2.997	37H	-3.198
08H	-2.609	18H	-2.81	28H	-3.01	38H	-3.21
09H	-2.622	19H	-2.822	29H	-3.022	39H	-3.223
0AH	-2.634	1AH	-2.835	2AH	-3.035	3AH	-3.235

0BH	-2.647	1BH	-2.847	2BH	-3.047	3BH	-3.248
0CH	-2.659	1CH	-2.86	2CH	-3.06	3CH	-3.26
0DH	-2.672	1DH	-2.872	2DH	-3.072	3DH	-3.273
0EH	-2.684	1EH	-2.885	2EH	-3.085	3EH	-3.285
0FH	-2.697	1FH	-2.897	2FH	-3.097	3FH	-3.298

van_adj[7:0] (Hex)	VGMN (V)	van_adj[7:0] (Hex)	VGMN (V)	van_adj[7:0] (Hex)	VGMN (V)	van_adj[7:0] (Hex)	VGMN (V)
40H	-3.31	50H	-3.511	60H	-3.711	70H	-3.911
41H	-3.323	51H	-3.523	61H	-3.724	71H	-3.924
42H	-3.335	52H	-3.536	62H	-3.736	72H	-3.936
43H	-3.348	53H	-3.548	63H	-3.749	73H	-3.949
44H	-3.36	54H	-3.561	64H	-3.761	74H	-3.962
45H	-3.373	55H	-3.573	65H	-3.774	75H	-3.974
46H	-3.385	56H	-3.586	66H	-3.786	76H	-3.987
47H	-3.398	57H	-3.598	67H	-3.799	77H	-3.999
48H	-3.41	58H	-3.611	68H	-3.811	78H	-4.012
49H	-3.423	59H	-3.623	69H	-3.824	79H	-4.024
4AH	-3.435	5AH	-3.636	6AH	-3.836	7AH	-4.037
4BH	-3.448	5BH	-3.648	6BH	-3.849	7BH	-4.049
4CH	-3.461	5CH	-3.661	6CH	-3.861	7CH	-4.062
4DH	-3.473	5DH	-3.673	6DH	-3.874	7DH	-4.074
4EH	-3.486	5EH	-3.686	6EH	-3.886	7EH	-4.087
4FH	-3.498	5FH	-3.698	6FH	-3.899	7FH	-4.099

van_adj[7:0] (Hex)	VGMN (V)	van_adj[7:0] (Hex)	VGMN (V)	van_adj[7:0] (Hex)	VGMN (V)	van_adj[7:0] (Hex)	VGMN (V)
80H	-4.112	90H	-4.312	A0H	-4.513	B0H	-4.713
81H	-4.124	91H	-4.325	A1H	-4.525	B1H	-4.726
82H	-4.137	92H	-4.337	A2H	-4.538	B2H	-4.738
83H	-4.149	93H	-4.35	A3H	-4.55	B3H	-4.751
84H	-4.162	94H	-4.362	A4H	-4.563	B4H	-4.763
85H	-4.174	95H	-4.375	A5H	-4.575	B5H	-4.776
86H	-4.187	96H	-4.387	A6H	-4.588	B6H	-4.788
87H	-4.2	97H	-4.4	A7H	-4.6	B7H	-4.801
88H	-4.212	98H	-4.412	A8H	-4.613	B8H	-4.813
89H	-4.225	99H	-4.425	A9H	-4.625	B9H	-4.826
8AH	-4.237	9AH	-4.438	AAH	-4.638	BAH	-4.838
8BH	-4.25	9BH	-4.45	ABH	-4.65	BBH	-4.851
8CH	-4.262	9CH	-4.463	ACH	-4.663	BCH	-4.863
8DH	-4.275	9DH	-4.475	ADH	-4.676	BDH	-4.876
8EH	-4.287	9EH	-4.488	AEH	-4.688	BEH	-4.888
8FH	-4.3	9FH	-4.5	AFH	-4.701	BFH	-4.901

van_adj[7:0] (Hex)	VGMN (V)	van_adj[7:0] (Hex)	VGMN (V)	van_adj[7:0] (Hex)	VGMN (V)	van_adj[7:0] (Hex)	VGMN (V)
C0H	-4.913	D0H	-5.114	E0H	-5.314	F0H	-5.515
C1H	-4.926	D1H	-5.126	E1H	-5.327	F1H	-5.527
C2H	-4.939	D2H	-5.139	E2H	-5.339	F2H	-5.54

C3H	-4.951	D3H	-5.151	E3H	-5.352	F3H	-5.552
C4H	-4.964	D4H	-5.164	E4H	-5.364	F4H	-5.565
C5H	-4.976	D5H	-5.177	E5H	-5.377	F5H	-5.577
C6H	-4.989	D6H	-5.189	E6H	-5.389	F6H	-5.59
C7H	-5.001	D7H	-5.202	E7H	-5.402	F7H	-5.602
C8H	-5.014	D8H	-5.214	E8H	-5.414	F8H	-5.615
C9H	-5.026	D9H	-5.227	E9H	-5.427	F9H	-5.627
CAH	-5.039	DAH	-5.239	EAH	-5.44	FAH	-5.64
CBH	-5.051	DBH	-5.252	EBH	-5.452	FBH	-5.652
CCH	-5.064	DCH	-5.264	ECH	-5.465	FCH	-5.665
CDH	-5.076	DDH	-5.277	EDH	-5.477	FDH	-5.677
CEH	-5.089	DEH	-5.289	EEH	-5.49	FEH	-5.69
CFH	-5.101	DFH	-5.302	EFH	-5.502	FFH	-5.702

vcom_adj: Set the output voltage for VCOM. The real value which send to VCOM is vcom_adj + vcom_offset.

vcom_adj[7:0] (Hex)	VCOM (V)	vcom_adj[7:0] (Hex)	VCOM (V)	vcom_adj[7:0] (Hex)	VCOM (V)	vcom_adj[7:0] (Hex)	VCOM (V)
00H	0.0000	10H	-0.3875	20H	-0.5875	30H	-0.7875
01H	-0.2000	11H	-0.4000	21H	-0.6000	31H	-0.8000
02H	-0.2125	12H	-0.4125	22H	-0.6125	32H	-0.8125
03H	-0.2250	13H	-0.4250	23H	-0.6250	33H	-0.8250
04H	-0.2375	14H	-0.4375	24H	-0.6375	34H	-0.8375
05H	-0.2500	15H	-0.4500	25H	-0.6500	35H	-0.8500
06H	-0.2625	16H	-0.4625	26H	-0.6625	36H	-0.8625
07H	-0.2750	17H	-0.4750	27H	-0.6750	37H	-0.8750
08H	-0.2875	18H	-0.4875	28H	-0.6875	38H	-0.8875
09H	-0.3000	19H	-0.5000	29H	-0.7000	39H	-0.9000
0AH	-0.3125	1AH	-0.5125	2AH	-0.7125	3AH	-0.9125
0BH	-0.3250	1BH	-0.5250	2BH	-0.7250	3BH	-0.9250
0CH	-0.3375	1CH	-0.5375	2CH	-0.7375	3CH	-0.9375
0DH	-0.3500	1DH	-0.5500	2DH	-0.7500	3DH	-0.9500
0EH	-0.3625	1EH	-0.5625	2EH	-0.7625	3EH	-0.9625
0FH	-0.3750	1FH	-0.5750	2FH	-0.7750	3FH	-0.9750

vcom_adj[7:0] (Hex)	VCOM (V)	vcom_adj[7:0] (Hex)	VCOM (V)	vcom_adj[7:0] (Hex)	VCOM (V)	vcom_adj[7:0] (Hex)	VCOM (V)
40H	-0.9875	50H	-1.1875	60H	-1.3875	70H	-1.5875
41H	-1.0000	51H	-1.2000	61H	-1.4000	71H	-1.6000
42H	-1.0125	52H	-1.2125	62H	-1.4125	72H	-1.6125
43H	-1.0250	53H	-1.2250	63H	-1.4250	73H	-1.6250
44H	-1.0375	54H	-1.2375	64H	-1.4375	74H	-1.6375
45H	-1.0500	55H	-1.2500	65H	-1.4500	75H	-1.6500
46H	-1.0625	56H	-1.2625	66H	-1.4625	76H	-1.6625
47H	-1.0750	57H	-1.2750	67H	-1.4750	77H	-1.6750
48H	-1.0875	58H	-1.2875	68H	-1.4875	78H	-1.6875
49H	-1.1000	59H	-1.3000	69H	-1.5000	79H	-1.7000
4AH	-1.1125	5AH	-1.3125	6AH	-1.5125	7AH	-1.7125
4BH	-1.1250	5BH	-1.3250	6BH	-1.5250	7BH	-1.7250
4CH	-1.1375	5CH	-1.3375	6CH	-1.5375	7CH	-1.7375
4DH	-1.1500	5DH	-1.3500	6DH	-1.5500	7DH	-1.7500

4EH	-1.1625	5EH	-1.3625	6EH	-1.5625	7EH	-1.7625
4FH	-1.1750	5FH	-1.3750	6FH	-1.5750	7FH	-1.7750

vcom_adj[7:0] (Hex)	VCOM (V)	vcom_adj[7:0] (Hex)	VCOM (V)	vcom_adj[7:0] (Hex)	VCOM (V)	vcom_adj[7:0] (Hex)	VCOM (V)
80H	-1.7875	90H	-1.9875	A0H	-2.1875	B0H	-2.3875
81H	-1.8000	91H	-2.0000	A1H	-2.2000	B1H	-2.4000
82H	-1.8125	92H	-2.0125	A2H	-2.2125	B2H	-2.4125
83H	-1.8250	93H	-2.0250	A3H	-2.2250	B3H	-2.4250
84H	-1.8375	94H	-2.0375	A4H	-2.2375	B4H	-2.4375
85H	-1.8500	95H	-2.0500	A5H	-2.2500	B5H	-2.4500
86H	-1.8625	96H	-2.0625	A6H	-2.2625	B6H	-2.4625
87H	-1.8750	97H	-2.0750	A7H	-2.2750	B7H	-2.4750
88H	-1.8875	98H	-2.0875	A8H	-2.2875	B8H	-2.4875
89H	-1.9000	99H	-2.1000	A9H	-2.3000	B9H	-2.5000
8AH	-1.9125	9AH	-2.1125	AAH	-2.3125	BAH	-2.5125
8BH	-1.9250	9BH	-2.1250	ABH	-2.3250	BBH	-2.5250
8CH	-1.9375	9CH	-2.1375	ACH	-2.3375	BCH	-2.5375
8DH	-1.9500	9DH	-2.1500	ADH	-2.3500	BDH	-2.5500
8EH	-1.9625	9EH	-2.1625	AEH	-2.3625	BEH	-2.5625
8FH	-1.9750	9FH	-2.1750	AFH	-2.3750	BFH	-2.5750

vcom_adj[7:0] (Hex)	VCOM (V)	vcom_adj[7:0] (Hex)	VCOM (V)	vcom_adj[7:0] (Hex)	VCOM (V)	vcom_adj[7:0] (Hex)	VCOM (V)
C0H	-2.5875	D0H	-2.7875	E0H	-2.9875	F0H	-3.1875
C1H	-2.6000	D1H	-2.8000	E1H	-3.0000	F1H	-3.2000
C2H	-2.6125	D2H	-2.8125	E2H	-3.0125	F2H	-3.2125
C3H	-2.6250	D3H	-2.8250	E3H	-3.0250	F3H	-3.2250
C4H	-2.6375	D4H	-2.8375	E4H	-3.0375	F4H	-3.2375
C5H	-2.6500	D5H	-2.8500	E5H	-3.0500	F5H	-3.2500
C6H	-2.6625	D6H	-2.8625	E6H	-3.0625	F6H	-3.2625
C7H	-2.6750	D7H	-2.8750	E7H	-3.0750	F7H	-3.2750
C8H	-2.6875	D8H	-2.8875	E8H	-3.0875	F8H	-3.2875
C9H	-2.7000	D9H	-2.9000	E9H	-3.1000	F9H	-3.3000
CAH	-2.7125	DAH	-2.9125	EAH	-3.1125	FAH	-3.3125
CBH	-2.7250	DBH	-2.9250	EBH	-3.1250	FBH	-3.3250
CCH	-2.7375	DCH	-2.9375	ECH	-3.1375	FCH	-3.3375
CDH	-2.7500	DDH	-2.9500	EDH	-3.1500	FDH	-3.3500
CEH	-2.7625	DEH	-2.9625	EEH	-3.1625	FEH	-3.3625
CFH	-2.7750	DFH	-2.9750	EFH	-3.1750	FFH	-3.3750

5.3.4. PADCTRL1: 48H

Address	PADCTRL1								
Parameter Address	D7	D6	D5	D4	D3	D2	D1	D0	Default
48H	0	0	vcom_hiz	0	sdo_oe	ledpwm_oe	te_oe	te1_oe	0fH

vcom_hiz：Set VCOM Hi-Z state when disable.H: enable;L: disable.

sdo_oe：sdo output enable.0: Hi-Z;1:output.

te1_oe：te1 pad outout enable.0: Hi-Z;1: output.

te_oe：te pad outout enable.0:Hi-Z;1: output.

ledpwm_oe：ledpwm pad outout enable.0: Hi-Z;1:output.

5.3.5. BOOST_CTRL1~4：80h~83h

Address	BOOST_CTRL1~4								
Parameter Address	D7	D6	D5	D4	D3	D2	D1	D0	Default
80h	0	boostm_sel	boostm[1:0]		clp_opt	boostm_opt[2:0]			8'h18
81h	0	fix_duty_n	drvn[1:0]		0	fix_duty_p	drvp		8'h11
82h	0	0	0	vsp_sel[4:0]					8'h1a
83h	0	0	0	vsn_sel[4:0]					8'h1a

Description

boostm_sel:boostm output select.“1”:select boostm register.“0”:select PAD boostm.
boostm_opt[2:0]: select power mode with the boostm[1:0].

boostm[1:0]: It is used to select power mode with boostm_opt[2:0].

BOOSTM[1]	BOOSTM[0]	BOOSTM_OPT[2:0]	Mode
0	1	X	Mode-8, External VSP and VSN
1	0	X	Mode-3, Power IC
1	1	000	Mode-1, One Coil + Two MOS
1	1	001	Mode-2, One Coil + One MOS
1	1	011	Mode-4, Two Coil + Two MOS
1	1	100	Mode-6, External VSP and One Coil + One MOS(VSN)

clp_opt: DC2DC Booster Clamp mode.

CLP_OPT	Descriptions
0	Enable the (VSP/VSN) clamp function
1	Disable the (VSP/VSN) clamp function

fix_duty_n: Enable Duty Clock Auto Adjusting Function.

FIX_DUTY_N	Description
0(default)	Auto Adjust Duty
1	Not Auto Adjust PFM Duty

drvn[1:0] : Driving capacity of DC2DCN driver.

DRVN[1:0]	Driving Capability of DC2DCN Driver
00	Level 1 (weak)
01	Level 2 (default)
10	Level 3
11	Level 4 (strong)

fix_duty_p: Enable Duty Clock Auto Adjusting Function.

FIX_DUTY_P	Description
0(default)	Auto Adjust Duty
1	Not Auto Adjust PFM Duty

drvp: Driving capacity of D2DCP driver.

DRVP[1:0]	Driving Capability of DC2DCP Driver
00	Level 1 (weak)
01	Level 2 (default)
10	Level 3
11	Level 4 (strong)

vsp_sel[4:0]: DC2DC Voltage setting of VSP.

VSP_SEL[4:0]	VSP(V)	VSP_SEL[4:0]	VSP(V)
00000	3.4	10000	5.0
00001	3.5	10001	5.1
00010	3.6	10010	5.2
00011	3.7	10011	5.3
00100	3.8	10100	5.4
00101	3.9	10101	5.5

00110	4.0	10110	5.6
00111	4.1	10111	5.7
01000	4.2	11000	5.8
01001	4.3	11001	5.9
01010	4.4	11010	6.0
01011	4.5	11011	6.1
01100	4.6	11100	6.2
01101	4.7	11101	6.3
01110	4.8	11110	6.4
01111	4.9	11111	6.5

vsn_sel[4:0]: DC2DC Voltage setting of VSN.

VSN_SEL[4:0]	VSN(V)	VSN_SEL[4:0]	VSN(V)
00000	-3.4	10000	-5.0
00001	-3.5	10001	-5.1
00010	-3.6	10010	-5.2
00011	-3.7	10011	-5.3
00100	-3.8	10100	-5.4
00101	-3.9	10101	-5.5
00110	-4.0	10110	-5.6
00111	-4.1	10111	-5.7
01000	-4.2	11000	-5.8
01001	-4.3	11001	-5.9
01010	-4.4	11010	-6.0
01011	-4.5	11011	-6.1
01100	-4.6	11100	-6.2
01101	-4.7	11101	-6.3
01110	-4.8	11110	-6.4
01111	-4.9	11111	-6.5

5.3.6. EXTPW_CTRL1~3:90H~92H

Address	EXTPW_CTRL1~3								
Parameter Address	D7	D6	D5	D4	D3	D2	D1	D0	Default
90H	ext_clkp_mode	ext_clkn_mode	1	0	ext_dm_nor[1:0]		ext_dm_pwr[1:0]		e5H
91H	0	ext_clkp_nor_width[2:0]			0	ext_clkp_pwr_width[2:0]			44H
92H	0	ext_clkn_nor_width[2:0]			0	ext_clkn_pwr_width[2:0]			44H

Description

ext_clkp_mode: DC2DC Booster external power IC mode.

ext_clkp_mode	Description
0	The pump clk clkp ratio can't change at power on region.
1	The pump clk clkp ratio can be set by EXT_CLKP_WIDTH at power on region.

ext_clkn_mode: DC2DC Booster external power IC mode

ext_clkn_mode	Description
0	The pump clk clkn ratio can't change at power on region
1	The pump clk clkn ratio can be set by EXT_CLKN_WIDTH at power on region

ext_dm_nor[1:0]: External power IC mode Pump ratio setting at normal display.

ext_dm_nor[1:0]	VSP pump ratio
00	1.5xVCI
01	2.0xVCI
10	3.0 xVCI
11	3.0 xVCI

ext_dm_pwr[1:0]: External power IC mode Pump ratio setting at power on region.

ext_dm_pwr[1:0]	VSP pump ratio
00	1.5xVCI
01	2.0xVCI
10	3.0 xVCI
11	3.0 xVCI

ext_clkp_nor_width[2:0]: External Power IC clkp ratio setting when normal display.

ext_clkp_nor_width[2:0]	CLK Frequency	ext_clkp_nor_width[2:0]	CLK Frequency
000	1/16 times	100	1 times
001	1/8 times	101	2 times
010	1/4 times	110	4 times
011	1/2 times	111	8 times

ext_clkp_pwr_width[2:0]: External Power IC clkp ratio setting when power on region.

ext_clkp_pwr_width[2:0]	CLK Frequency	ext_clkp_pwr_width[2:0]	CLK Frequency
000	1/16 times	100	1 times
001	1/8 times	101	2 times
010	1/4 times	110	4 times
011	1/2 times	111	8 times

ext_clkn_nor_width[2:0]: External Power IC clkn ratio setting when normal display.

ext_clkn_nor_width[2:0]	CLK Frequency	ext_clkn_nor_width[2:0]	CLK Frequency
000	1/16 times	100	1 times
001	1/8 times	101	2 times
010	1/4 times	110	4 times
011	1/2 times	111	8 times

ext_clkn_pwr_width[2:0]: External Power IC clkn ratio setting when power on region.

ext_clkn_pwr_width[2:0]	CLK Frequency	ext_clkn_pwr_width[2:0]	CLK Frequency
000	1/16 times	100	1 times
001	1/8 times	101	2 times
010	1/4 times	110	4 times
011	1/2 times	111	8 times

5.3.7. PUMP_CTRL1~4:98H~9BH

Address	PUMP_CTRL1~4								
Parameter Address	D7	D6	D5	D4	D3	D2	D1	D0	Default
98H	vgh_cmp_en	vgh_amp_en	vgh_sync	0	pump_ss_width[1:0]		vgh_sel[1:0]		4aH
99H	vgh_clk_sel[3:0]				vgh_clamp[3:0]				54H
9AH	vgl_cmp_en	vgl_amp_en	vgl_sync	0	0	0	vgl_sel[1:0]		41H
9BH	vgl_clk_sel[3:0]				vgl_clamp[3:0]				56H

Description

vgh_cmp_en: VGH pump output clamp using digital mode.

vgh_cmp_en	VGH clamp digital mode
0	Disable
1	Enable

vgh_amp_en:VGH pump output clamp using linear mode.

vgh_amp_en	VGH clamp linear mode
0	Disable
1	Enable

Note: when vgh_amp_en and vgh_cmp_en are both 1, the VGH pump output clamp will use linear mode as the ouput clamp working mode.

vgh_sync: VGH pump output clamp synchronizes with clock when using digital mode.

vgh_sync	VGH clamp synchronize function
0	Disable
1	Enable

pump_ss_width[1:0]: Set the soft start time for HV pumps. The longer soft start time, the smaller peak current when pumps pump up, but the longer time to pump to the work voltage. Adjust the soft start time take into account the trade-off between the peak current when pump and pump time.

pump_ss_width[1:0]	Multiple of soft start time to refresh one line time
00	128 lines
01	256 lines
10	512 lines
11	1024 lines

vgh_sel[1:0]: set the factor used in the set-up circuits for VGH.
Select the optimal step-up factor for the operating voltage. To reduce power consumption, set a smaller factor.

vgh_sel[1:0]	VGH OUTPUT
00	2xVSP
01	3xVSP
10	4xVSP

11	5xVSP

Note: When vpp_src_selr=1, then the factor will change as follows.

vgh_sel[1:0]	VGH OUTPUT
00	2xVSP
01	3xVSP
10	2xVSP
11	3xVSP

vgh_clk_sel[3:0]: Set the VGH pump's working frequency which is the ratio of the main clock.

vgh_clk_sel[3:0]				VGH pump frequency
0	0	0	0	1/2 times
0	0	0	1	1/4 times
0	0	1	0	1/6 times
0	0	1	1	1/8 times
0	1	0	0	1/10 times
0	1	0	1	1/12 times
0	1	1	0	1/14 times
0	1	1	1	1/16 times
1	0	0	0	1/18 times
1	0	0	1	1/20 times
1	0	1	0	1/22 times
1	0	1	1	1/24 times
1	1	0	0	1/26 times
1	1	0	1	1/28 times
1	1	1	0	1/30 times
1	1	1	1	1/32 times

vgh_clamp[3:0]: Set the VGH pump's clamp level.

vgh_clamp[3:0]				VGH clamp level(V)
0	0	0	0	11.0
0	0	0	1	12.0
0	0	1	0	13.0
0	0	1	1	14.0
0	1	0	0	15.0
0	1	0	1	15.5
0	1	1	0	16.0
0	1	1	1	16.5
1	0	0	0	17.0
1	0	0	1	17.5
1	0	1	0	18.0
1	0	1	1	18.5
1	1	0	0	19.0
1	1	0	1	19.5
1	1	1	0	20.0
1	1	1	1	20.5

Note: When vpp_src_selr=1, then the factor will change as follows.

vgh_clamp_sel[3:0]				VGH clamp level(V)
x	0	0	0	7.5
x	0	0	1	8.0
x	0	1	0	8.5
x	0	1	1	9.0
x	1	0	0	9.5

x	1	0	1	10.0
x	1	1	0	10.5
x	1	1	1	11.0

vgl_cmp_en: VGL pump output clamp using digital mode.

vgl_cmp_en	VGL clamp digital mode
0	Disable
1	Enable

vgl_amp_en: VGL pump output clamp using linear mode.

vgl_amp_en	VGL clamp linear mode
0	Disable
1	Enable

Note: when vgl_amp_en and vgl_cmp_en are both 1, the VGL pump output clamp will use linear mode as the ouput clamp working mode.

vgl_sync: VGL pump output clamp synchronizes with clock when using digital mode.

vgl_sync	VGL clamp synchronize function
0	Disable
1	Enable

vgl_sel[1:0]: set the factor used in the set-up circuits for VGL.
Select the optimal step-up factor for the operating voltage. To reduce power consumption, set a smaller factor.

vgl_sel[1:0]	VGL OUTPUT
00	2xVSN
01	3xVSN
10	4xVSN
11	4xVSN

vgl_clk_sel[3:0]: Set the VGL pump's working frequency which is the ratio of main clock.

vgl_clk_sel[3:0]				VGL pump frequency
0	0	0	0	1/2 times
0	0	0	1	1/4 times
0	0	1	0	1/6 times
0	0	1	1	1/8 times
0	1	0	0	1/10 times
0	1	0	1	1/12 times
0	1	1	0	1/14 times
0	1	1	1	1/16 times
1	0	0	0	1/18 times
1	0	0	1	1/20 times
1	0	1	0	1/22 times
1	0	1	1	1/24 times
1	1	0	0	1/26 times
1	1	0	1	1/28 times
1	1	1	0	1/30 times
1	1	1	1	1/32 times

vgl_clamp[3:0]: Set the VGL pump's clamp level.

vgl_clamp[3:0]				VGL clamp level(V)
0	0	0	0	-7.0
0	0	0	1	-7.5
0	0	1	0	-8.0
0	0	1	1	-8.5
0	1	0	0	-9.0
0	1	0	1	-9.5
0	1	1	0	-10.0
0	1	1	1	-11.0
1	0	0	0	-11.5
1	0	0	1	-12.0
1	0	1	0	-12.5
1	0	1	1	-13.0
1	1	0	0	-14.0
1	1	0	1	-14.5
1	1	1	0	-15.0
1	1	1	1	-15.5

5.3.8. RDEXTCSPI:F8H

F8H	RDEXTCSPI								
	D7	D6	D5	D4	D3	D2	D1	D0	Default
Command	1	1	1	1	1	0	0	0	F8H
Parameter	ext_spi_re	0	0	0	0	0	0	0	00H
Description	ext_spi_re: enable the read function of Custom Command in SPI operation mode. 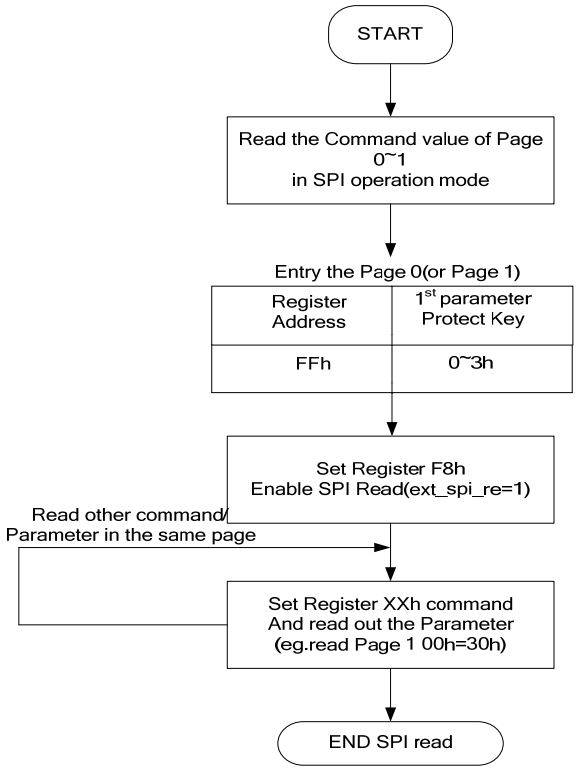								

5.3.9. ENEXTC:FFH

FFh	ENEXTC								
	D7	D6	D5	D4	D3	D2	D1	D0	Default
Command	1	1	1	1	1	1	1	1	FFH
Parameter	0	0	0	0	0	0	page[1:0]		00H
Description	Config page. Write three times. The first time write 30h, the second time write 52h, the last time write page[1:0]								

page	Descriptions
00	select page0
01	select page1
10	select page2
11	select page3

Page2 command													
Instruction	DCX	WRX	RDX	D7	D6	D5	D4	D3	D2	D1	D0	Hex	Function
PGAMPK2	0	↑	1	1	0	1	1	1	0	1	0	BAh	gam_config
	1	↑	1	0	0	0	pkp2[4:0]					18h	-
PGAMPK3	0	↑	1	1	0	1	1	1	0	1	1	BBh	gam_config
	1	↑	1	0	0	0	pkp3[4:0]					18h	-
PGAMPK4	0	↑	1	1	0	1	1	1	1	0	0	BCh	gam_config
	1	↑	1	0	0	0	pkp4[4:0]					18h	-
PGAMPK5	0	↑	1	1	0	1	1	1	1	0	1	BDh	gam_config
	1	↑	1	0	0	0	pkp5[4:0]					18h	-
PGAMPK6	0	↑	1	1	0	1	1	1	1	1	0	BEh	gam_config
	1	↑	1	0	0	0	pkp6[4:0]					1ah	-
PGAMPK7	0	↑	1	1	0	1	1	1	1	1	1	BFh	gam_config
	1	↑	1	0	0	0	pkp7[4:0]					0fh	-
PGAMPK8	0	↑	1	1	1	0	0	0	0	0	0	C0h	gam_config
	1	↑	1	0	0	0	pkp8[4:0]					18h	-
PGAMPK9	0	↑	1	1	1	0	0	0	0	0	1	C1h	gam_config
	1	↑	1	0	0	0	pkp9[4:0]					09h	-
GAMP0	0	↑	1	1	1	0	0	0	0	1	0	C2h	gam_config
	1	↑	1	0	0	0	gamp0[4:0]					00h	-
NGAMVR0	0	↑	1	1	1	0	1	0	0	0	0	D0h	gam_config
	1	↑	1	0	0	vrn0[5:0]						02h	-
NGAMVR1	0	↑	1	1	1	0	1	0	0	0	1	D1h	gam_config
	1	↑	1	0	0	vrn1[5:0]						02h	-
NGAMVR2	0	↑	1	1	1	0	1	0	0	1	0	D2h	gam_config
	1	↑	1	0	0	vrn2[5:0]						02h	-
NGAMVR3	0	↑	1	1	1	0	1	0	0	1	1	D3h	gam_config
	1	↑	1	0	0	vrn3[5:0]						11h	-
NGAMVR4	0	↑	1	1	1	0	1	0	1	0	0	D4h	gam_config
	1	↑	1	0	0	vrn4[5:0]						16h	-
NGAMVR5	0	↑	1	1	1	0	1	0	1	0	1	D5h	gam_config
	1	↑	1	0	0	vrn5[5:0]						34h	-

Page2 command													
Instruction	DCX	WRX	RDX	D7	D6	D5	D4	D3	D2	D1	D0	Hex	Function
NGAMPR0	0	↑	1	1	1	0	1	0	1	1	0	D6h	gam_config
	1	↑	1	0	prn0[6:0]							15h	-
NGAMPR1	0	↑	1	1	1	0	1	0	1	1	1	D7h	gam_config
	1	↑	1	0	prn1[6:0]							32h	-
NGAMPK0	0	↑	1	1	1	0	1	1	0	0	0	D8h	gam_config
	1	↑	1	0	0	0	pkn0[4:0]					11h	-
NGAMPK1	0	↑	1	1	1	0	1	1	0	0	1	D9h	gam_config
	1	↑	1	0	0	0	pkn1[4:0]					05h	-
NGAMPK2	0	↑	1	1	1	0	1	1	0	1	0	DAh	gam_config
	1	↑	1	0	0	0	pkn2[4:0]					18h	-
NGAMPK3	0	↑	1	1	1	0	1	1	0	1	1	DBh	gam_config
	1	↑	1	0	0	0	pkn3[4:0]					18h	-
NGAMPK4	0	↑	1	1	1	0	1	1	1	0	0	DCh	gam_config
	1	↑	1	0	0	0	pkn4[4:0]					18h	-
NGAMPK5	0	↑	1	1	1	0	1	1	1	0	1	DDh	gam_config
	1	↑	1	0	0	0	pkn5[4:0]					18h	-
NGAMPK6	0	↑	1	1	1	0	1	1	1	1	0	DEh	gam_config
	1	↑	1	0	0	0	pkn6[4:0]					1ah	-
NGAMPK7	0	↑	1	1	1	0	1	1	1	1	1	DFh	gam_config
	1	↑	1	0	0	0	pkn7[4:0]					0fh	-
NGAMPK8	0	↑	1	1	1	1	0	0	0	0	0	E0h	gam_config
	1	↑	1	0	0	0	pkn8[4:0]					18h	-
NGAMPK9	0	↑	1	1	1	1	0	0	0	0	1	E1h	gam_config
	1	↑	1	0	0	0	pkn9[4:0]					09h	-
GAMN0	0	↑	1	1	1	1	0	0	0	1	0	E2h	gam_config
	1	↑	1	0	0	0	gamn0[4:0]					00h	-
ENEXTC	0	↑	1	1	1	1	1	1	1	1	1	FFh	page_ctrl
	1	↑	1	0	0	0	0	0	0	page[1:0]		00h	-

5.3.10. PGAMVR0~5;PGAMPR0~1;PGAMPK0~9;GAMP0:B0H~C2H

Address	PGAMVR0~5;PGAMPR0~1;PGAMPK0~9;GAMP0								
Parameter Address	D7	D6	D5	D4	D3	D2	D1	D0	Default
B0H	0	0	vrp0[5:0]						02H
B1H	0	0	vrp1[5:0]						02H
B2H	0	0	vrp2[5:0]						02H
B3H	0	0	vrp3[5:0]						11H
B4H	0	0	vrp4[5:0]						16H
B5H	0	0	vrp5[5:0]						34H
B6H	0	prp0[6:0]							15H
B7H	0	prp1[6:0]							32H
B8H	0	0	0	pkp0[4:0]					11H
B9H	0	0	0	pkp1[4:0]					05H
BAH	0	0	0	pkp2[4:0]					18H
BBH	0	0	0	pkp3[4:0]					18H
BCH	0	0	0	pkp4[4:0]					18H
BDH	0	0	0	pkp5[4:0]					18H
BEH	0	0	0	pkp6[4:0]					1aH
BFH	0	0	0	pkp7[4:0]					0fH
C0H	0	0	0	pkp8[4:0]					18H
C1H	0	0	0	pkp9[4:0]					09H
C2H	0	0	0	gamp0[4:0]					00H
Description	Set the gray scale voltage to adjust the gamma characteristics of the TFT panel.								

5.3.11. NGAMVR0~5;NGAMPR0~1;NGAMPK0~9;GAMN0:D0H~E2H

Address	NGAMVR0~5;NGAMPR0~1;NGAMPK0~9;GAMN0								
Parameter Address	D7	D6	D5	D4	D3	D2	D1	D0	Default
D0H	0	0	vrn0[5:0]						02H
D1H	0	0	vrn1[5:0]						02H
D2H	0	0	vrn2[5:0]						02H
D3H	0	0	vrn3[5:0]						11H
D4H	0	0	vrn4[5:0]						16H
D5H	0	0	vrn5[5:0]						34H
D6H	0	prn0[6:0]							15H
D7H	0	prn1[6:0]							32H
D8H	0	0	0	pkn0[4:0]					11H
D9H	0	0	0	pkn1[4:0]					05H
DAH	0	0	0	pkn2[4:0]					18H
DBH	0	0	0	pkn3[4:0]					18H
DCH	0	0	0	pkn4[4:0]					18H
DDH	0	0	0	pkn5[4:0]					18H
DEH	0	0	0	pkn6[4:0]					1aH
DFH	0	0	0	pkn7[4:0]					0fH
E0H	0	0	0	pkn8[4:0]					18H
E1H	0	0	0	pkn9[4:0]					09H
E2H	0	0	0	gamn0[4:0]					00H
Description	Set the gray scale voltage to adjust the gamma characteristics of the TFT panel.								

5.3.12. ENEXTC:FFH

FFh	ENEXTC								
	D7	D6	D5	D4	D3	D2	D1	D0	Default
Command	1	1	1	1	1	1	1	1	FFH
Parameter	0	0	0	0	0	0	page[1:0]		00H
Description	Config page. Write three times. The first time write 30h, the second time write 52h, the last time write page[1:0]. Write three times.The frist time write 30h, the second time write 52h, the last time write the								

page	Descriptions
00	select page0
01	select page1
10	select page2
11	select page3

Page 3 command													
Instruction	DCX	WRX	RDX	D7	D6	D5	D4	D3	D2	D1	D0	Hex	Function
GIP_VST_1	0	↑	1	0	0	0	0	0	0	0	0	00h	vst_ctrl
	1	↑	1	vst_gnd1_period[7:0]								80h	-
GIP_VST_2	0	↑	1	0	0	0	0	0	0	0	1	01h	vst_ctrl
	1	↑	1	vst_gnd2_period[7:0]								80h	-
GIP_VST_3	0	↑	1	0	0	0	0	0	0	1	0	02h	vst_ctrl
	1	↑	1	vst_vsp_period[7:0]								80h	-
GIP_VST_4	0	↑	1	0	0	0	0	0	0	1	1	03h	vst_ctrl
	1	↑	1	vst_vsn_period[7:0]								80h	-
GIP_VST_5	0	↑	1	0	0	0	0	0	1	0	0	04h	vst_ctrl
	1	↑	1	gip_vst_tglue[9:8]		gip_vst_tchop[9:8]		0	0	vst_noverlap[1:0]		01h	-
GIP_VST_6	0	↑	1	0	0	0	0	0	1	0	1	05h	vst_ctrl
	1	↑	1	gip_vst_tchop[7:0]								00h	-
GIP_VST_7	0	↑	1	0	0	0	0	0	1	1	0	06h	vst_ctrl
	1	↑	1	gip_vst_tglue[7:0]								00h	-
GIP_VST_8	0	↑	1	0	0	0	0	0	1	1	1	07h	vst_ctrl
	1	↑	1	0	0	0	0	gip_vst_width[3:0]				03h	-
GIP_VST_9	0	↑	1	0	0	0	0	1	0	0	0	08h	vst_ctrl
	1	↑	1	gip_vst1_shift[7:0]								0ch	-
GIP_VST_10	0	↑	1	0	0	0	0	1	0	0	1	09h	vst_ctrl
	1	↑	1	gip_vst2_shift[7:0]								0dh	-
GIP_VST_11	0	↑	1	0	0	0	0	1	0	1	0	0Ah	vst_ctrl
	1	↑	1	gip_vst3_shift[7:0]								0eh	-
GIP_VST_12	0	↑	1	0	0	0	0	1	0	1	1	0Bh	vst_ctrl
	1	↑	1	gip_vst4_shift[7:0]								0fh	-
GIP_VEND_1	0	↑	1	0	0	1	0	0	0	0	0	20h	vend_ctrl
	1	↑	1	vend_gnd1_period[7:0]								80h	-
GIP_VEND_2	0	↑	1	0	0	1	0	0	0	0	1	21h	vend_ctrl
	1	↑	1	vend_gnd2_period[7:0]								80h	
GIP_VEND_3	0	↑	1	0	0	1	0	0	0	1	0	22h	vend_ctrl
	1	↑	1	vend_vsp_period[7:0]								80h	-
GIP_VEND_4	0	↑	1	0	0	1	0	0	0	1	1	23h	vend_ctrl
	1	↑	1	vend_vsn_period[7:0]								80h	-

Page 3 command													
Instruction	DCX	WRX	RDX	D7	D6	D5	D4	D3	D2	D1	D0	Hex	Function
GIP_VEND_5	0	↑	1	0	0	1	0	0	1	0	0	24h	vend_ctrl
	1	↑	1	gip_vend_tglue[9:8]		gip_vend_tchop[9:8]		0	0	vend_noverlap[1:0]		01h	-
GIP_VEND_6	0	↑	1	0	0	1	0	0	1	0	1	25h	vend_ctrl
	1	↑	1	gip_vend_tchop[7:0]								00h	-
GIP_VEND_7	0	↑	1	0	0	1	0	0	1	1	0	26h	vend_ctrl
	1	↑	1	gip_vend_tglue[7:0]								00h	-
GIP_VEND_8	0	↑	1	0	0	1	0	0	1	1	1	27h	vend_ctrl
	1	↑	1	0	0	0	0	gip_vend_width[3:0]				03h	-
GIP_VEND_9	0	↑	1	0	0	1	0	1	0	0	0	28h	vend_ctrl
	1	↑	1	0	gip_vend2_shift[10:8]			0	gip_vend1_shift[10:8]			55h	-
GIP_VEND_10	0	↑	1	0	0	1	0	1	0	0	1	29h	vend_ctrl
	1	↑	1	0	gip_vend4_shift[10:8]			0	gip_vend3_shift[10:8]			55h	-
GIP_VEND_11	0	↑	1	0	0	1	0	1	0	1	0	2Ah	vend_ctrl
	1	↑	1	gip_vend1_shift[7:0]								10h	-
GIP_VEND_12	0	↑	1	0	0	1	0	1	0	1	1	2Bh	vend_ctrl
	1	↑	1	gip_vend2_shift[7:0]								11h	-
GIP_VEND_13	0	↑	1	0	0	1	0	1	1	0	0	2Ch	vend_ctrl
	1	↑	1	gip_vend3_shift[7:0]								12h	-
GIP_VEND_14	0	↑	1	0	0	1	0	1	1	0	1	2Dh	vend_ctrl
	1	↑	1	gip_vend4_shift[7:0]								13h	-
GIP_CLK_1	0	↑	1	0	0	1	1	0	0	0	0	30h	gclk_global_ctrl
	1	↑	1	gclk_gnd1_period[7:0]								80h	-
GIP_CLK_2	0	↑	1	0	0	1	1	0	0	0	1	31h	gclk_global_ctrl
	1	↑	1	gclk_gnd2_period[7:0]								80h	-
GIP_CLK_3	0	↑	1	0	0	1	1	0	0	1	0	32h	gclk_global_ctrl
	1	↑	1	gclk_vsp_period[7:0]								80h	-
GIP_CLK_4	0	↑	1	0	0	1	1	0	0	1	1	33h	gclk_global_ctrl
	1	↑	1	gclk_vsn_period[7:0]								80h	-
GIP_CLK_5	0	↑	1	0	0	1	1	0	1	0	0	34h	gclk_global_ctrl
	1	↑	1	gip_clk_tglue[9:8]		gip_clk_tchop[9:8]		0	0	gclk_noverlap[1:0]		01h	-
GIP_CLK_6	0	↑	1	0	0	1	1	0	1	0	1	35h	gclk_global_ctrl
	1	↑	1	gip_clk_tglue[7:0]								00h	-

Page 3 command													
Instruction	DCX	WRX	RDX	D7	D6	D5	D4	D3	D2	D1	D0	Hex	Function
GIP_CLK_7	0	↑	1	0	0	1	1	0	1	1	0	36h	gclk_global_ctrl
	1	↑	1	gip_clk_tchop[7:0]								00h	-
GIP_CLK_8	0	↑	1	0	0	1	1	0	1	1	1	37h	gclk_global_ctrl
	1	↑	1	duty_block[3:0]				gip_clk_width[3:0]				03h	-
GIP_CLKA_1	0	↑	1	0	1	0	0	0	0	0	0	40h	clka_ctrl
	1	↑	1	gip_clka1_shift[7:0]								10h	-
GIP_CLKA_2	0	↑	1	0	1	0	0	0	0	0	1	41h	clka_ctrl
	1	↑	1	gip_clka2_shift[7:0]								11h	-
GIP_CLKA_3	0	↑	1	0	1	0	0	0	0	1	0	42h	clka_ctrl
	1	↑	1	gip_clka3_shift[7:0]								12h	-
GIP_CLKA_4	0	↑	1	0	1	0	0	0	0	1	1	43h	clka_ctrl
	1	↑	1	gip_clka4_shift[7:0]								13h	-
GIP_CLKA_5	0	↑	1	0	1	0	0	0	1	0	0	44h	clka_ctrl
	1	↑	1	0	gip_clka1_switch[10:8]			0	gip_clka2_switch[10:8]			55h	-
GIP_CLKA_6	0	↑	1	0	1	0	0	0	1	0	1	45h	clka_ctrl
	1	↑	1	gip_clka1_switch[7:0]								10h	-
GIP_CLKA_7	0	↑	1	0	1	0	0	0	1	1	0	46h	clka_ctrl
	1	↑	1	gip_clka2_switch[7:0]								11h	-
GIP_CLKA_8	0	↑	1	0	1	0	0	0	1	1	1	47h	clka_ctrl
	1	↑	1	0	gip_clka4_switch[10:8]			0	gip_clka3_switch[10:8]			55h	-
GIP_CLKA_9	0	↑	1	0	1	0	0	1	0	0	0	48h	clka_ctrl
	1	↑	1	gip_clka3_switch[7:0]								12h	-
GIP_CLKA_10	0	↑	1	0	1	0	0	1	0	0	1	49h	clka_ctrl
	1	↑	1	gip_clka4_switch[7:0]								13h	-
GIP_CLKB_1	0	↑	1	0	1	0	1	0	0	0	0	50h	clkb_ctrl
	1	↑	1	gip_clkb1_shift[7:0]								14h	-
GIP_CLKB_2	0	↑	1	0	1	0	1	0	0	0	1	51h	clkb_ctrl
	1	↑	1	gip_clkb2_shift[7:0]								15h	-
GIP_CLKB_3	0	↑	1	0	1	0	1	0	0	1	0	52h	clkb_ctrl
	1	↑	1	gip_clkb3_shift[7:0]								16h	-
GIP_CLKB_4	0	↑	1	0	1	0	1	0	0	1	1	53h	clkb_ctrl
	1	↑	1	gip_clkb4_shift[7:0]								17h	-
GIP_CLKB_5	0	↑	1	0	1	0	1	0	1	0	0	54h	clkb_ctrl
	1	↑	1	0	gip_clkb1_switch[10:8]			0	gip_clkb2_switch[10:8]			55h	-

Page 3 command													
Instruction	DCX	WRX	RDX	D7	D6	D5	D4	D3	D2	D1	D0	Hex	Function
GIP_CLKB_6	0	↑	1	0	1	0	1	0	1	0	1	55h	clkb_ctrl
	1	↑	1	gip_clkb1_switch[7:0]								14h	-
GIP_CLKB_7	0	↑	1	0	1	0	1	0	1	1	0	56h	clkb_ctrl
	1	↑	1	gip_clkb2_switch[7:0]								15h	-
GIP_CLKB_8	0	↑	1	0	1	0	1	0	1	1	1	57h	clkb_ctrl
	1	↑	1	0	gip_clkb4_switch[10:8]			0	gip_clkb3_switch[10:8]			55h	-
GIP_CLKB_9	0	↑	1	0	1	0	1	1	0	0	0	58h	clkb_ctrl
	1	↑	1	gip_clkb3_switch[7:0]								16h	-
GIP_CLKB_10	0	↑	1	0	1	0	1	1	0	0	1	59h	clkb_ctrl
	1	↑	1	gip_clkb4_switch[7:0]								17h	-
GIP_CLKC_1	0	↑	1	0	1	1	0	0	0	0	0	60h	clkc_ctrl
	1	↑	1	gip_clkc1_shift[7:0]								00h	-
GIP_CLKC_2	0	↑	1	0	1	1	0	0	0	0	1	61h	clkc_ctrl
	1	↑	1	gip_clkc2_shift[7:0]								00h	-
GIP_CLKC_3	0	↑	1	0	1	1	0	0	0	1	0	62h	clkc_ctrl
	1	↑	1	gip_clkc3_shift[7:0]								00h	-
GIP_CLKC_4	0	↑	1	0	1	1	0	0	0	1	1	63h	clkc_ctrl
	1	↑	1	gip_clkc4_shift[7:0]								00h	-
GIP_CLKC_5	0	↑	1	0	1	1	0	0	1	0	0	64h	clkc_ctrl
	1	↑	1	0	gip_clkc1_switch[10:8]			0	gip_clkc2_switch[10:8]			00h	-
GIP_CLKC_6	0	↑	1	0	1	1	0	0	1	0	1	65h	clkc_ctrl
	1	↑	1	gip_clkc1_switch[7:0]								00h	-
GIP_CLKC_7	0	↑	1	0	1	1	0	0	1	1	0	66h	clkc_ctrl
	1	↑	1	gip_clkc2_switch[7:0]								00h	-
GIP_CLKC_8	0	↑	1	0	1	1	0	0	1	1	1	67h	clkc_ctrl
	1	↑	1	0	gip_clkc4_switch[10:8]			0	gip_clkc3_switch[10:8]			00h	-
GIP_CLKC_9	0	↑	1	0	1	1	0	1	0	0	0	68h	clkc_ctrl
	1	↑	1	gip_clkc3_switch[7:0]								00h	-
GIP_CLKC_10	0	↑	1	0	1	1	0	1	0	0	1	69h	clkc_ctrl
	1	↑	1	gip_clkc4_switch[7:0]								00h	-
GIP_ECLK1	0	↑	1	0	1	1	1	0	0	0	0	70h	eclk_ctrl
	1	↑	1	0	0	eclk_tchop[9:8]		eclk_width[3:0]				02h	-
GIP_ECLK2	0	↑	1	0	1	1	1	0	0	0	1	71h	eclk_ctrl
	1	↑	1	eclk_tchop[7:0]								00h	-

Page 3 command													
Instruction	DCX	WRX	RDX	D7	D6	D5	D4	D3	D2	D1	D0	Hex	Function
PANELU2D1	0	↑	1	1	0	0	0	0	0	0	0	80h	map_u2d_ctrl
	1	↑	1	0	0	0	u2d_sel1[4:0]					1eh	-
PANELU2D2	0	↑	1	1	0	0	0	0	0	0	1	81h	map_u2d_ctrl
	1	↑	1	0	0	0	u2d_sel2[4:0]					1eh	-
PANELU2D3	0	↑	1	1	0	0	0	0	0	1	0	82h	map_u2d_ctrl
	1	↑	1	0	0	0	u2d_sel3[4:0]					1eh	-
PANELU2D4	0	↑	1	1	0	0	0	0	0	1	1	83h	map_u2d_ctrl
	1	↑	1	0	0	0	u2d_sel4[4:0]					1eh	-
PANELU2D5	0	↑	1	1	0	0	0	0	1	0	0	84h	map_u2d_ctrl
	1	↑	1	0	0	0	u2d_sel5[4:0]					1eh	-
PANELU2D6	0	↑	1	1	0	0	0	0	1	0	1	85h	map_u2d_ctrl
	1	↑	1	0	0	0	u2d_sel6[4:0]					1eh	-
PANELU2D7	0	↑	1	1	0	0	0	0	1	1	0	86h	map_u2d_ctrl
	1	↑	1	0	0	0	u2d_sel7[4:0]					1eh	-
PANELU2D8	0	↑	1	1	0	0	0	0	1	1	1	87h	map_u2d_ctrl
	1	↑	1	0	0	0	u2d_sel8[4:0]					1eh	-
PANELU2D9	0	↑	1	1	0	0	0	1	0	0	0	88h	map_u2d_ctrl
	1	↑	1	0	0	0	u2d_sel9[4:0]					1eh	-
PANELU2D10	0	↑	1	1	0	0	0	1	0	0	1	89h	map_u2d_ctrl
	1	↑	1	0	0	0	u2d_sel10[4:0]					1eh	-
PANELU2D11	0	↑	1	1	0	0	0	1	0	1	0	8Ah	map_u2d_ctrl
	1	↑	1	0	0	0	u2d_sel11[4:0]					1eh	-
PANELU2D12	0	↑	1	1	0	0	0	1	0	1	1	8Bh	map_u2d_ctrl
	1	↑	1	0	0	0	u2d_sel12[4:0]					1eh	-
PANELU2D13	0	↑	1	1	0	0	0	1	1	0	0	8Ch	map_u2d_ctrl
	1	↑	1	0	0	0	u2d_sel13[4:0]					1eh	-
PANELU2D14	0	↑	1	1	0	0	0	1	1	0	1	8Dh	map_u2d_ctrl
	1	↑	1	0	0	0	u2d_sel14[4:0]					1eh	-
PANELU2D15	0	↑	1	1	0	0	0	1	1	1	0	8Eh	map_u2d_ctrl
	1	↑	1	0	0	0	u2d_sel15[4:0]					1eh	-
PANELU2D16	0	↑	1	1	0	0	0	1	1	1	1	8Fh	map_u2d_ctrl
	1	↑	1	0	0	0	u2d_sel16[4:0]					1eh	-

Page 3 command													
Instruction	D/CX	WRX	RDX	D7	D6	D5	D4	D3	D2	D1	D0	Hex	Function
PANELU2D17	0	↑	1	1	0	0	1	0	0	0	0	90h	map_u2d_ctrl
	1	↑	1	0	0	0	u2d_sel17[4:0]					1eh	-
PANELU2D18	0	↑	1	1	0	0	1	0	0	0	1	91h	map_u2d_ctrl
	1	↑	1	0	0	0	u2d_sel18[4:0]					1eh	-
PANELU2D19	0	↑	1	1	0	0	1	0	0	1	0	92h	map_u2d_ctrl
	1	↑	1	0	0	0	u2d_sel19[4:0]					1eh	-
PANELU2D20	0	↑	1	1	0	0	1	0	0	1	1	93h	map_u2d_ctrl
	1	↑	1	0	0	0	u2d_sel20[4:0]					1eh	-
PANELU2D21	0	↑	1	1	0	0	1	0	1	0	0	94h	map_u2d_ctrl
	1	↑	1	0	0	0	u2d_sel21[4:0]					1eh	-
PANELU2D22	0	↑	1	1	0	0	1	0	1	0	1	95h	map_u2d_ctrl
	1	↑	1	0	0	0	u2d_sel22[4:0]					1eh	-
PANELU2D23	0	↑	1	1	0	0	1	0	1	1	0	96h	map_u2d_ctrl
	1	↑	1	0	0	0	u2d_sel23[4:0]					1eh	-
PANELU2D24	0	↑	1	1	0	0	1	0	1	1	1	97h	map_u2d_ctrl
	1	↑	1	0	0	0	u2d_sel24[4:0]					1eh	-
PANELU2D25	0	↑	1	1	0	0	1	1	0	0	0	98h	map_u2d_ctrl
	1	↑	1	0	0	0	u2d_sel25[4:0]					1eh	-
PANELU2D26	0	↑	1	1	0	0	1	1	0	0	1	99h	map_u2d_ctrl
	1	↑	1	0	0	0	u2d_sel26[4:0]					1eh	-
PANELU2D27	0	↑	1	1	0	0	1	1	0	1	0	9Ah	map_u2d_ctrl
	1	↑	1	0	0	0	u2d_sel27[4:0]					1eh	-
PANELU2D28	0	↑	1	1	0	0	1	1	0	1	1	9Bh	map_u2d_ctrl
	1	↑	1	0	0	0	u2d_sel28[4:0]					1eh	-
PANELU2D29	0	↑	1	1	0	0	1	1	1	0	0	9Ch	map_u2d_ctrl
	1	↑	1	0	0	0	u2d_sel29[4:0]					1eh	-
PANELU2D30	0	↑	1	1	0	0	1	1	1	0	1	9Dh	map_u2d_ctrl
	1	↑	1	0	0	0	u2d_sel30[4:0]					1eh	-

Page 3 command													
Instruction	DCX	WRX	RDX	D7	D6	D5	D4	D3	D2	D1	D0	Hex	Function
PANELU2D31	0	↑	1	1	0	0	1	1	1	1	0	9Eh	map_u2d_ctrl
	1	↑	1	0	0	0	u2d_sel31[4:0]					1eh	-
PANELU2D32	0	↑	1	1	0	0	1	1	1	1	1	9Fh	map_u2d_ctrl
	1	↑	1	0	0	0	u2d_sel32[4:0]					1eh	-
PANELU2D33	0	↑	1	1	0	1	0	0	0	0	0	A0h	map_u2d_ctrl
	1	↑	1	0	0	0	u2d_sel33[4:0]					1eh	-
PANELU2D34	0	↑	1	1	0	1	0	0	0	0	1	A1h	map_u2d_ctrl
	1	↑	1	0	0	0	u2d_sel34[4:0]					1eh	-
PANELU2D35	0	↑	1	1	0	1	0	0	0	1	0	A2h	map_u2d_ctrl
	1	↑	1	0	0	0	u2d_sel35[4:0]					1eh	-
PANELU2D36	0	↑	1	1	0	1	0	0	0	1	1	A3h	map_u2d_ctrl
	1	↑	1	0	0	0	u2d_sel36[4:0]					1eh	-
PANELU2D37	0	↑	1	1	0	1	0	0	1	0	0	A4h	map_u2d_ctrl
	1	↑	1	0	0	0	u2d_sel37[4:0]					1eh	-
PANELU2D38	0	↑	1	1	0	1	0	0	1	0	1	A5h	map_u2d_ctrl
	1	↑	1	0	0	0	u2d_sel38[4:0]					1eh	-
PANELU2D39	0	↑	1	1	0	1	0	0	1	1	0	A6h	map_u2d_ctrl
	1	↑	1	0	0	0	u2d_sel39[4:0]					1eh	-
PANELU2D40	0	↑	1	1	0	1	0	0	1	1	1	A7h	map_u2d_ctrl
	1	↑	1	0	0	0	u2d_sel40[4:0]					1eh	-
PANELU2D41	0	↑	1	1	0	1	0	1	0	0	0	A8h	map_u2d_ctrl
	1	↑	1	0	0	0	u2d_sel41[4:0]					1eh	-
PANELU2D42	0	↑	1	1	0	1	0	1	0	0	1	A9h	map_u2d_ctrl
	1	↑	1	0	0	0	u2d_sel42[4:0]					1eh	-
PANELU2D43	0	↑	1	1	0	1	0	1	0	1	0	AAh	map_u2d_ctrl
	1	↑	1	0	0	0	u2d_sel43[4:0]					1eh	-
PANELU2D44	0	↑	1	1	0	1	0	1	0	1	1	ABh	map_u2d_ctrl
	1	↑	1	0	0	0	u2d_sel44[4:0]					1eh	-
PANELD2U1	0	↑	1	1	0	1	1	0	0	0	0	B0h	map_d2u_ctrl
	1	↑	1	0	0	0	d2u_sel1[4:0]					1eh	-
PANELD2U2	0	↑	1	1	0	1	1	0	0	0	1	B1h	map_d2u_ctrl
	1	↑	1	0	0	0	d2u_sel2[4:0]					1eh	-
PANELD2U3	0	↑	1	1	0	1	1	0	0	1	0	B2h	map_d2u_ctrl
	1	↑	1	0	0	0	d2u_sel3[4:0]					1eh	-

Page 3 commad													
Instruction	DCX	WRX	RDX	D7	D6	D5	D4	D3	D2	D1	D0	Hex	Function
PANELD2U4	0	↑	1	1	0	1	1	0	0	1	1	B3h	map_d2u_ctrl
	1	↑	1	0	0	0	d2u_sel4[4:0]					1eh	-
PANELD2U5	0	↑	1	1	0	1	1	0	1	0	0	B4h	map_u2d_ctrl
	1	↑	1	0	0	0	d2u_sel5[4:0]					1eh	-
PANELD2U6	0	↑	1	1	0	1	1	0	1	0	1	B5h	map_u2d_ctrl
	1	↑	1	0	0	0	d2u_sel6[4:0]					1eh	-
PANELD2U7	0	↑	1	1	0	1	1	0	1	1	0	B6h	map_u2d_ctrl
	1	↑	1	0	0	0	d2u_sel7[4:0]					1eh	-
PANELD2U8	0	↑	1	1	0	1	1	0	1	1	1	B7h	map_u2d_ctrl
	1	↑	1	0	0	0	d2u_sel8[4:0]					1eh	-
PANELD2U9	0	↑	1	1	0	1	1	1	0	0	0	B8h	map_u2d_ctrl
	1	↑	1	0	0	0	d2u_sel9[4:0]					1eh	-
PANELD2U10	0	↑	1	1	0	1	1	1	0	0	1	B9h	map_u2d_ctrl
	1	↑	1	0	0	0	d2u_sel10[4:0]					1eh	-
PANELD2U11	0	↑	1	1	0	1	1	1	0	1	0	BAh	map_u2d_ctrl
	1	↑	1	0	0	0	d2u_sel11[4:0]					1eh	-
PANELD2U12	0	↑	1	1	0	1	1	1	0	1	1	BBh	map_u2d_ctrl
	1	↑	1	0	0	0	d2u_sel12[4:0]					1eh	-
PANELD2U13	0	↑	1	1	0	1	1	1	1	0	0	BCh	map_u2d_ctrl
	1	↑	1	0	0	0	d2u_sel13[4:0]					1eh	-
PANELD2U14	0	↑	1	1	0	1	1	1	1	0	1	BDh	map_u2d_ctrl
	1	↑	1	0	0	0	d2u_sel14[4:0]					1eh	-
PANELD2U15	0	↑	1	1	0	1	1	1	1	1	0	BEh	map_u2d_ctrl
	1	↑	1	0	0	0	d2u_sel15[4:0]					1eh	-
PANELD2U16	0	↑	1	1	0	1	1	1	1	1	1	BFh	map_u2d_ctrl
	1	↑	1	0	0	0	d2u_sel16[4:0]					1eh	-
PANELD2U17	0	↑	1	1	1	0	0	0	0	0	0	C0h	map_u2d_ctrl
	1	↑	1	0	0	0	d2u_sel17[4:0]					1eh	-
PANELD2U18	0	↑	1	1	1	0	0	0	0	0	1	C1h	map_u2d_ctrl
	1	↑	1	0	0	0	d2u_sel18[4:0]					1eh	-
PANELD2U19	0	↑	1	1	1	0	0	0	0	1	0	C2h	map_u2d_ctrl
	1	↑	1	0	0	0	d2u_sel19[4:0]					1eh	-

Page 3 command													
Instruction	DCX	WRX	RDX	D7	D6	D5	D4	D3	D2	D1	D0	Hex	Function
PANELD2U20	0	↑	1	1	1	0	0	0	0	1	1	C3h	map_u2d_ctrl
	1	↑	1	0	0	0	d2u_sel20[4:0]					1eh	-
PANELD2U21	0	↑	1	1	1	0	0	0	1	0	0	C4h	map_u2d_ctrl
	1	↑	1	0	0	0	d2u_sel21[4:0]					1eh	-
PANELD2U22	0	↑	1	1	1	0	0	0	1	0	1	C5h	map_u2d_ctrl
	1	↑	1	0	0	0	d2u_sel22[4:0]					1eh	-
PANELD2U23	0	↑	1	1	1	0	0	0	1	1	0	C6h	map_u2d_ctrl
	1	↑	1	0	0	0	d2u_sel23[4:0]					1eh	-
PANELD2U24	0	↑	1	1	1	0	0	0	1	1	1	C7h	map_u2d_ctrl
	1	↑	1	0	0	0	d2u_sel24[4:0]					1eh	-
PANELD2U25	0	↑	1	1	1	0	0	1	0	0	0	C8h	map_u2d_ctrl
	1	↑	1	0	0	0	d2u_sel25[4:0]					1eh	-
PANELD2U26	0	↑	1	1	1	0	0	1	0	0	1	C9h	map_u2d_ctrl
	1	↑	1	0	0	0	d2u_sel26[4:0]					1eh	-
PANELD2U27	0	↑	1	1	1	0	0	1	0	1	0	CAh	map_u2d_ctrl
	1	↑	1	0	0	0	d2u_sel27[4:0]					1eh	-
PANELD2U28	0	↑	1	1	1	0	0	1	0	1	1	CBh	map_u2d_ctrl
	1	↑	1	0	0	0	d2u_sel28[4:0]					1eh	-
PANELD2U29	0	↑	1	1	1	0	0	1	1	0	0	CCh	map_u2d_ctrl
	1	↑	1	0	0	0	d2u_sel29[4:0]					1eh	-
PANELD2U30	0	↑	1	1	1	0	0	1	1	0	1	CDh	map_u2d_ctrl
	1	↑	1	0	0	0	d2u_sel30[4:0]					1eh	-
PANELD2U31	0	↑	1	1	1	0	0	1	1	1	0	CEh	map_u2d_ctrl
	1	↑	1	0	0	0	d2u_sel31[4:0]					1eh	-
PANELD2U32	0	↑	1	1	1	0	0	1	1	1	1	CFh	map_u2d_ctrl
	1	↑	1	0	0	0	d2u_sel32[4:0]					1eh	-
PANELD2U33	0	↑	1	1	1	0	1	0	0	0	0	D0h	map_u2d_ctrl
	1	↑	1	0	0	0	d2u_sel33[4:0]					1eh	-
PANELD2U34	0	↑	1	1	1	0	1	0	0	0	1	D1h	map_u2d_ctrl
	1	↑	1	0	0	0	d2u_sel34[4:0]					1eh	-
PANELD2U35	0	↑	1	1	1	0	1	0	0	1	0	D2h	map_u2d_ctrl
	1	↑	1	0	0	0	d2u_sel35[4:0]					1eh	-

Page 3 command													
Instruction	DCX	WRX	RDX	D7	D6	D5	D4	D3	D2	D1	D0	Hex	Function
PANELD2U36	0	↑	1	1	1	0	1	0	0	1	1	D3h	map_u2d_ctrl
	1	↑	1	0	0	0	d2u_sel36[4:0]					1eh	-
PANELD2U37	0	↑	1	1	1	0	1	0	1	0	0	D4h	map_u2d_ctrl
	1	↑	1	0	0	0	d2u_sel37[4:0]					1eh	-
PANELD2U38	0	↑	1	1	1	0	1	0	1	0	1	D5h	map_u2d_ctrl
	1	↑	1	0	0	0	d2u_sel38[4:0]					1eh	-
PANELD2U39	0	↑	1	1	1	0	1	0	1	1	0	D6h	map_u2d_ctrl
	1	↑	1	0	0	0	d2u_sel39[4:0]					1eh	-
PANELD2U40	0	↑	1	1	1	0	1	0	1	1	1	D7h	map_u2d_ctrl
	1	↑	1	0	0	0	d2u_sel40[4:0]					1eh	-
PANELD2U41	0	↑	1	1	1	0	1	1	0	0	0	D8h	map_u2d_ctrl
	1	↑	1	0	0	0	d2u_sel41[4:0]					1eh	-
PANELD2U42	0	↑	1	1	1	0	1	1	0	0	1	D9h	map_u2d_ctrl
	1	↑	1	0	0	0	d2u_sel42[4:0]					1eh	-
PANELD2U43	0	↑	1	1	1	0	1	1	0	1	0	DAh	map_u2d_ctrl
	1	↑	1	0	0	0	d2u_sel43[4:0]					1eh	-
PANELD2U44	0	↑	1	1	1	0	1	1	0	1	1	DBh	map_u2d_ctrl
	1	↑	1	0	0	0	d2u_sel44[4:0]					1eh	-
GIP_OUT	0	↑	1	1	1	1	0	0	0	0	0	E0h	goa_out_ctrl
	1	↑	1	0	0	0	gip_lvd_sel	gip_slpin_sel[1:0]		dir1_level	dir2_level	1ah	-
ENEXTC	0	↑	1	1	1	1	1	1	1	1	1	FFh	page_ctrl
	1	↑	1	0	0	0	0	0	0	page[1:0]		00h	-

5.3.13 GIP_VST_1~12:00H~0BH

Address	GIP_VST_1~12								
Parameter Address	D7	D6	D5	D4	D3	D2	D1	D0	Default
00H	vst_gnd1_period[7:0]								80H
01H	vst_gnd2_period[7:0]								80H
02H	vst_vsp_period[7:0]								80H
03H	vst_vsn_period[7:0]								80H
04H	gip_vst_tglue[9:8]		gip_vst_tchop[9:8]		0	0	vst_noverlap[1:0]		01H
05H	gip_vst_tchop[7:0]								00H
06H	gip_vst_tglue[7:0]								00H
07H	0	0	0	0	gip_vst_width[3:0]				03H
08H	gip_vst1_shift[7:0]								0cH
09H	gip_vst2_shift[7:0]								0dH
0AH	gip_vst3_shift[7:0]								0eH
0BH	gip_vst4_shift[7:0]								0fH
Description	vst_gnd1_period[7:0]: gnd 1 period(unit tcon_clk). vst_gnd2_period[7:0]: gnd 2 period(unit tcon_clk). vst_vsp_period[7:0]: vsp period(unit tcon_clk). vst_vsn_period[7:0]: vsn period(unit tcon_clk). vst_noverlap[1:0]: noverlap(unit tcon_clk). gip_vst_tchop[9:0]: delay rising edge of gip_vst(unit tcon_clk). gip_vst_tglue[9:0]: delay falling edge of gip_vend(unit tcon_clk). gip_vst_width[3:0]: the half_period of the gip_vst signal, half_perid = gip_vst_width+1(unit=line). gip_vst1_shift[7:0]: the start point of gip_vst1 where the clock starts to toggle. gip_vst2_shift[7:0]: the start point of gip_vst2 where the clock starts to toggle. gip_vst3_shift[7:0]: the start point of gip_vst3 where the clock starts to toggle. gip_vst4_shift[7:0]: the start point of gip_vst4 where the clock starts to toggle.								

5.3.14. GIP_VEND_1~14:20H~2DH

Address	GIP_VEND_1~14								
Parameter Address	D7	D6	D5	D4	D3	D2	D1	D0	Default
20h	vend_gnd1_period[7:0]								80H
21h	vend_gnd2_period[7:0]								80H
22h	vend_vsp_period[7:0]								80H
23h	vend_vsn_period[7:0]								80H
24h	gip_vend_tglue[9:8]		gip_vend_tchop[9:8]		0	0	vend_noverlap[1:0]		01H
25h	gip_vend_tchop[7:0]								00H
26h	gip_vend_tglue[7:0]								00H
27h	0	0	0	0	gip_vend_width[3:0]				03H
28h	0	gip_vend2_shift[10:8]			0	gip_vend1_shift[10:8]			55H
29h	0	gip_vend4_shift[10:8]			0	gip_vend3_shift[10:8]			55H
2Ah	gip_vend1_shift[7:0]								10H
2Bh	gip_vend2_shift[7:0]								11H
2Ch	gip_vend3_shift[7:0]								12H
2Dh	gip_vend4_shift[7:0]								13H
Description	vend_gnd1_period[7:0]: gnd 1 period(unit tcon_clk). vend_gnd2_period[7:0]: gnd 2 period(unit tcon_clk). vend_vsp_period[7:0]: vsp period(unit tcon_clk). vend_vsn_period[7:0]: vsn period(unit tcon_clk). vend_noverlap[1:0]: noverlap(unit tcon_clk). gip_vend_tchop[9:0]: delay rising edge of gip_vend(unit tcon_clk). gip_vend_tglue[9:0]: delay falling edge of gip_vend(unit tcon_clk). gip_vend_width[3:0]: the half_period of the gip_vend signal, half_perid = gip_vst_width+1(unit=line). gip_vend1_shift[10:0]: the start point of gip_vend1 where the clock starts to toggle. gip_vend2_shift[10:0]: the start point of gip_vend2 where the clock starts to toggle. gip_vend3_shift[10:0]: the start point of gip_vend3 where the clock starts to toggle. gip_vend4_shift[10:0]: the start point of gip_vend 4 where the clock starts to toggle.								

5.3.15. GIP_CLK_1~8:30H~37H

Address	GIP_CLK_1~8								
Parameter Address	D7	D6	D5	D4	D3	D2	D1	D0	Default
30h	gclk_gnd1_period[7:0]								80H
31h	gclk_gnd2_period[7:0]								80H
32h	gclk_vsp_period[7:0]								80H
33h	gclk_vsn_period[7:0]								80H
34h	gip_clk_tglue[9:8]		gip_clk_tchop[9:8]		0	0	gclk_noverlap[1:0]		01H
35h	gip_clk_tglue[7:0]								00H
36h	gip_clk_tchop[7:0]								00H
37h	duty_block[3:0]				gip_clk_width[3:0]				03H
Description	gclk_gnd1_period[7:0]: gnd 1 period(unit tcon_clk). gclk_gnd2_period[7:0]: gnd 2 period(unit tcon_clk). gclk_vsp_period[7:0]: vsp period(unit tcon_clk). gclk_vsn_period[7:0]: vsn period(unit tcon_clk). gclk_noverlap[1:0]: noverlap(unit tcon_clk). gip_clk_tchop[9:0]: delay rising edge of gip_clk(unit tcon_clk). gip_clk_tglue[9:0]: delay falling edge of gip_clk(unit tcon_clk). gip_clk_width[3:0]: the half_period of the gip_clk signal, half_perid = gip_clk_width+1(unit=line). duty_block[3:0]: it changes gip_clk high-low duty ratio while maintain clk period.								

5.3.16. GIP_CLKA_1~10:40H~49H

Address	GIP_CLKA_1~10								
Parameter Address	D7	D6	D5	D4	D3	D2	D1	D0	Default
40h	gip_clka1_shift[7:0]								10H
41h	gip_clka2_shift[7:0]								11H
42h	gip_clka3_shift[7:0]								12H
43h	gip_clka4_shift[7:0]								13H
44h	0	gip_clka1_switch[10:8]			0	gip_clka2_switch[10:8]			55H
45h	gip_clka1_switch[7:0]								10H
46h	gip_clka2_switch[7:0]								11H
47h	0	gip_clka4_switch[10:8]			0	gip_clka3_switch[10:8]			55H
48h	gip_clka3_switch[7:0]								12H
49h	gip_clka4_switch[7:0]								13H
Description	gip_clka1_shift[7:0]: the start point of gip_clk where the clock starts to toggle. gip_clka2_shift[7:0]: the start point of gip_clk where the clock starts to toggle. gip_clka3_shift[7:0]: the start point of gip_clk where the clock starts to toggle. gip_clka4_shift[7:0]: the start point of gip_clk where the clock starts to toggle. gip_clka1_switch[10:0]: the end position of the gip_clk signal with respect to the reference point. gip_clka2_switch[10:0]: the end position of the gip_clk signal with respect to the reference point. gip_clka3_switch[10:0]: the end position of the gip_clk signal with respect to the reference point. gip_clka4_switch[10:0]: the end position of the gip_clk signal with respect to the reference point.								

5.3.17. GIP_CLKB_1~10:50H~59H

Address	GIP_CLKB_1~10								
Parameter Address	D7	D6	D5	D4	D3	D2	D1	D0	Default
50h	gip_clkb1_shift[7:0]								14H
51h	gip_clkb2_shift[7:0]								15H
52h	gip_clkb3_shift[7:0]								16H
53h	gip_clkb4_shift[7:0]								17H
54h	0	gip_clkb1_switch[10:8]			0	gip_clkb2_switch[10:8]			55H
55h	gip_clkb1_switch[7:0]								14H
56h	gip_clkb2_switch[7:0]								15H
57h	0	gip_clkb4_switch[10:8]			0	gip_clkb3_switch[10:8]			55H
58h	gip_clkb3_switch[7:0]								16H
59h	gip_clkb4_switch[7:0]								17H
Description	gip_clkb1_shift[7:0]: the start point of gip_clk where the clock starts to toggle. gip_clkb2_shift[7:0]: the start point of gip_clk where the clock starts to toggle. gip_clkb3_shift[7:0]: the start point of gip_clk where the clock starts to toggle. gip_clkb4_shift[7:0]: the start point of gip_clk where the clock starts to toggle. gip_clkb1_switch[10:0]: the end position of the gip_clk signal with respect to the reference point. gip_clkb2_switch[10:0]: the end position of the gip_clk signal with respect to the reference point. gip_clkb3_switch[10:0]: the end position of the gip_clk signal with respect to the reference point. gip_clkb4_switch[10:0]: the end position of the gip_clk signal with respect to the reference point.								

5.3.18. GIP_CLKC_1~10:60H~69H

Address	GIP_CLKC_1~10								
Parameter Address	D7	D6	D5	D4	D3	D2	D1	D0	Default
60h	gip_clkc1_shift[7:0]								00H
61h	gip_clkc2_shift[7:0]								00H
62h	gip_clkc3_shift[7:0]								00H
63h	gip_clkc4_shift[7:0]								00H
64h	0	gip_clkc1_switch[10:8]			0	gip_clkc2_switch[10:8]			00H
65h	gip_clkc1_switch[7:0]								00H
66h	gip_clkc2_switch[7:0]								00H
67h	0	gip_clkc4_switch[10:8]			0	gip_clkc3_switch[10:8]			00H
68h	gip_clkc3_switch[7:0]								00H
69h	gip_clkc4_switch[7:0]								00H
Description	gip_clkc1_shift[7:0]: the start point of gip_clk where the clock starts to toggle. gip_clkc2_shift[7:0]: the start point of gip_clk where the clock starts to toggle. gip_clkc3_shift[7:0]: the start point of gip_clk where the clock starts to toggle. gip_clkc4_shift[7:0]: the start point of gip_clk where the clock starts to toggle. gip_clkc1_switch[10:0]: the end position of the gip_clk signal with respect to the reference point. gip_clkc2_switch[10:0]: the end position of the gip_clk signal with respect to the reference point. gip_clkc3_switch[10:0]: the end position of the gip_clk signal with respect to the reference point. gip_clkc4_switch[10:0]: the end position of the gip_clk signal with respect to the reference point.								

5.3.19. GIP_ECLK1~2:70H~71H

Address	GIP_ECLK1~2								
Parameter Address	D7	D6	D5	D4	D3	D2	D1	D0	Default
70h	0	0	eclk_tchop[9:8]		eclk_width[3:0]				02H
71h	eclk_tchop[7:0]								00H
Description	eclk_width[3:0]: =1,half_period = 1/2line>1,half_period=eclk_width-1(unit=frames). eclk_tchop[9:0]: set the tchop(rising edge delay)time.								

5.3.20. PANELU2D1~44:80H~ABH

Address	PANELU2D1~44								
Parameter Address	D7	D6	D5	D4	D3	D2	D1	D0	Default
80h	0	0	0	u2d_sel1[4:0]					1eH
81h	0	0	0	u2d_sel2[4:0]					1eH
82h	0	0	0	u2d_sel3[4:0]					1eH
83h	0	0	0	u2d_sel4[4:0]					1eH
84h	0	0	0	u2d_sel5[4:0]					1eH
85h	0	0	0	u2d_sel6[4:0]					1eH
86h	0	0	0	u2d_sel7[4:0]					1eH
87h	0	0	0	u2d_sel8[4:0]					1eH
88h	0	0	0	u2d_sel9[4:0]					1eH
89h	0	0	0	u2d_sel10[4:0]					1eH
8Ah	0	0	0	u2d_sel11[4:0]					1eH
8Bh	0	0	0	u2d_sel12[4:0]					1eH
8Ch	0	0	0	u2d_sel13[4:0]					1eH
8Dh	0	0	0	u2d_sel14[4:0]					1eH
8Eh	0	0	0	u2d_sel15[4:0]					1eH
8Fh	0	0	0	u2d_sel16[4:0]					1eH
90h	0	0	0	u2d_sel17[4:0]					1eH
91h	0	0	0	u2d_sel18[4:0]					1eH
92h	0	0	0	u2d_sel19[4:0]					1eH
93h	0	0	0	u2d_sel20[4:0]					1eH
94h	0	0	0	u2d_sel21[4:0]					1eH

95h	0	0	0	u2d_sel22[4:0]	1eH
96h	0	0	0	u2d_sel23[4:0]	1eH
97h	0	0	0	u2d_sel24[4:0]	1eH
98h	0	0	0	u2d_sel25[4:0]	1eH
99h	0	0	0	u2d_sel26[4:0]	1eH
9Ah	0	0	0	u2d_sel27[4:0]	1eH
9Bh	0	0	0	u2d_sel28[4:0]	1eH
9Ch	0	0	0	u2d_sel29[4:0]	1eH
9Dh	0	0	0	u2d_sel30[4:0]	1eH
9Eh	0	0	0	u2d_sel31[4:0]	1eH
9Fh	0	0	0	u2d_sel32[4:0]	1eH
A0h	0	0	0	u2d_sel33[4:0]	1eH
A1h	0	0	0	u2d_sel34[4:0]	1eH
A2h	0	0	0	u2d_sel35[4:0]	1eH
A3h	0	0	0	u2d_sel36[4:0]	1eH
A4h	0	0	0	u2d_sel37[4:0]	1eH
A5h	0	0	0	u2d_sel38[4:0]	1eH
A6h	0	0	0	u2d_sel39[4:0]	1eH
A7h	0	0	0	u2d_sel40[4:0]	1eH
A8h	0	0	0	u2d_sel41[4:0]	1eH
A9h	0	0	0	u2d_sel42[4:0]	1eH
AAh	0	0	0	u2d_sel43[4:0]	1eH
ABh	0	0	0	u2d_sel44[4:0]	1eH
Description	u2d_sel1[4:0]～u2d_sel44[4:0]:map internal goa signals to GOA output pad for normal scan.				

5.3.21. PANELD2U1~44:B0H~DBH

Address	PANELD2U1~44								
Parameter Address	D7	D6	D5	D4	D3	D2	D1	D0	Default
B0h	0	0	0	d2u_sel1[4:0]					1eH
B1h	0	0	0	d2u_sel2[4:0]					1eH
B2h	0	0	0	d2u_sel3[4:0]					1eH
B3h	0	0	0	d2u_sel4[4:0]					1eH
B4h	0	0	0	d2u_sel5[4:0]					1eH
B5h	0	0	0	d2u_sel6[4:0]					1eH
B6h	0	0	0	d2u_sel7[4:0]					1eH
B7h	0	0	0	d2u_sel8[4:0]					1eH
B8h	0	0	0	d2u_sel9[4:0]					1eH
B9h	0	0	0	d2u_sel10[4:0]					1eH
BAh	0	0	0	d2u_sel11[4:0]					1eH
BBh	0	0	0	d2u_sel12[4:0]					1eH
BCh	0	0	0	d2u_sel13[4:0]					1eH
BDh	0	0	0	d2u_sel14[4:0]					1eH
BEh	0	0	0	d2u_sel15[4:0]					1eH
BFh	0	0	0	d2u_sel16[4:0]					1eH
C0h	0	0	0	d2u_sel17[4:0]					1eH
C1h	0	0	0	d2u_sel18[4:0]					1eH
C2h	0	0	0	d2u_sel19[4:0]					1eH
C3h	0	0	0	d2u_sel20[4:0]					1eH
C4h	0	0	0	d2u_sel21[4:0]					1eH
C5h	0	0	0	d2u_sel22[4:0]					1eH
C6h	0	0	0	d2u_sel23[4:0]					1eH
C7h	0	0	0	d2u_sel24[4:0]					1eH
C8h	0	0	0	d2u_sel25[4:0]					1eH
C9h	0	0	0	d2u_sel26[4:0]					1eH
CAh	0	0	0	d2u_sel27[4:0]					1eH
CBh	0	0	0	d2u_sel28[4:0]					1eH
CCh	0	0	0	d2u_sel29[4:0]					1eH

CDh	0	0	0	d2u_sel30[4:0]	1eH
CEh	0	0	0	d2u_sel31[4:0]	1eH
CFh	0	0	0	d2u_sel32[4:0]	1eH
D0h	0	0	0	d2u_sel33[4:0]	1eH
D1h	0	0	0	d2u_sel34[4:0]	1eH
D2h	0	0	0	d2u_sel35[4:0]	1eH
D3h	0	0	0	d2u_sel36[4:0]	1eH
D4h	0	0	0	d2u_sel37[4:0]	1eH
D5h	0	0	0	d2u_sel38[4:0]	1eH
D6h	0	0	0	d2u_sel39[4:0]	1eH
D7h	0	0	0	d2u_sel40[4:0]	1eH
D8h	0	0	0	d2u_sel41[4:0]	1eH
D9h	0	0	0	d2u_sel42[4:0]	1eH
DAh	0	0	0	d2u_sel43[4:0]	1eH
DBh	0	0	0	d2u_sel44[4:0]	1eH
Description	d2u_sel1[4:0]～d2u_sel44[4:0]: map internal goa signals to GOA output pad for normal scan				

5.3.22. GIP_OUT:E0H

E0h	GIP_OUT								
	D7	D6	D5	D4	D3	D2	D1	D0	Default
Command	1	1	1	0	0	0	0	0	E0H
Parameter	0	0	0	gip_lvd_sel	gip_slpin_sel[1:0]		dir1_level	dir2_level	1aH
Description	gip_lvd_sel: gip output during low voltage detected.0:VGL;1:VGH. gip_slpin_sel[1:0]: gip output during sleep in select.00:VSS;01:VGH;10:VGL;11:HIZ. dir1_level: select DC signal tcon_goa_dir1 output level. dir2_level: select DC signal tcon_goa_dir2 output level.								

5.3.23. ENEXTC:FFH

FFh	ENEXTC								
	D7	D6	D5	D4	D3	D2	D1	D0	Default
Command	1	1	1	1	1	1	1	1	FFH
Parameter	0	0	0	0	0	0	page[1:0]		00H
Description	Config page. Write three times. The first time write 30h, the second time write 52h, the last time write page[1:0]								

page	Descriptions
00	select page0
01	select page1
10	select page2
11	select page3

6. FUNCTIONS

6.1.1 RGB Interface Selection

The RGB interface is operated with VS, HS, DE, PCLK, D[23:0] lines.It supports several pixel formats that can be selected by dpi [2:0] bits in “Interface Pixel Format (R3Ah)” of Page 0 command. The selection of a given interface is defined by dpi [2:0] as show in the below table

RGB Interface Selection

dpi[2:0]			RGB Interface Mode	Used Pins
1	0	1	16-bit RGB interface	VS,HS,DE,PCLK,D[20:16],D[13:8],D[4:0]
1	1	0	18-bit RGB interface	VS,HS,DE,PCLK,D[21:16],D[13:8],D[5:0]
1	1	1	24-bit RGB interface	VS,HS,DE,PCLK,D[23:0]
Others			Setting prohibited	

.

16-bit DPI interface connection:set pixel format DPI[2:0]=3'h5

18-bit DPI interface connection:set pixel format DPI[2:0]=3'h6

24-bit DPI interface connection:set pixel format DPI[2:0]=3'h7

RGB Interface 16/18/24-bit pixel format selection

The Pixel clock (PCLK) is running all the time without stopping, it is used for entering VS, HS, DE and D[23:0] states when there is a rising edge of the PCLK. The PCLK can not be used as the internal clock for other functions of the display module.

Vertical sync hronization (VS) is used to tell when there is received a new frame of the display. This is low enable and its state is read to the display module by a rising edge of the PCLK signal.

Horizontal synchroni zation (HS) is used to tell when there is received a new line of the frame. This is low enable and its state is read to the display module by a rising edge of the PCLK signal .

DE (Data Enable) is used to tell when there is received RGB information that should be transferred on the display. This is a high enable and its state is read to the display module by a rising edge of the PCLK signal.

D[23:0] are used to tell what is the information of the image that is transferred on the display(When DE= ’0’ (low) and there is a rising edge of PCLK). D[23:0] can be ‘0’ (low) or ‘1’(high). These lines are read by a rising edge of the PCLK signal.

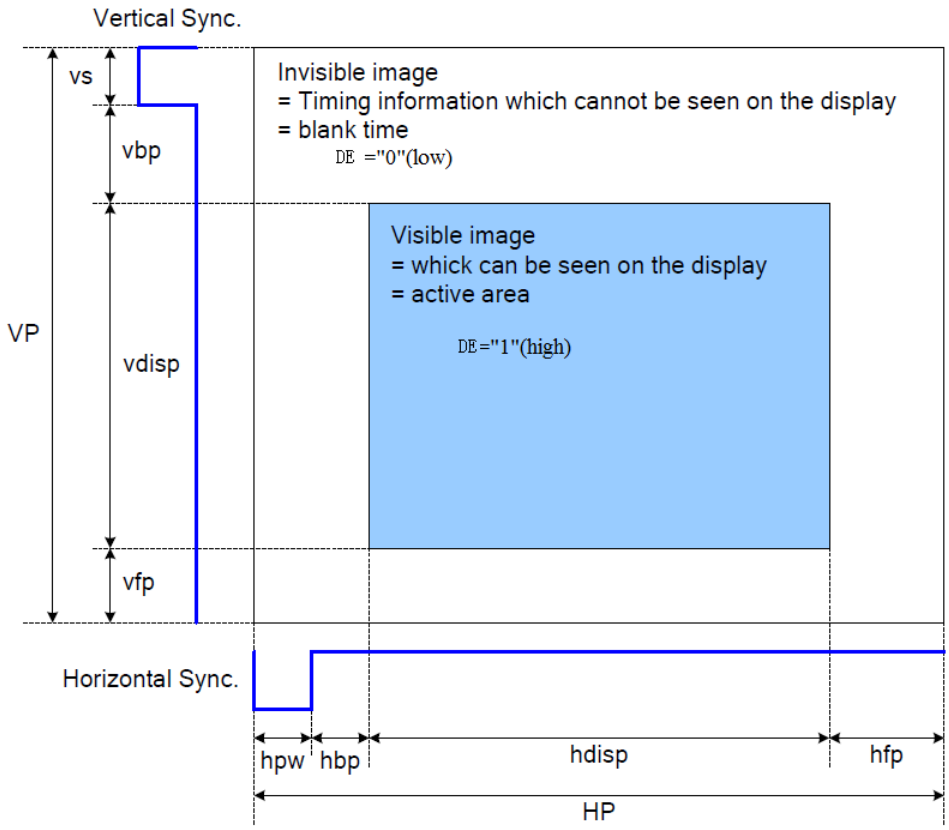

DRAM Access Area by RGB Interface

6.1.2 RGB Interface Mode Selection

NV3052CGRB supports two kinds of RGB interface, DE mode and SYNC mode.The table shown below uses command 23h to select RGB interface mode.

sync_mode[1:0]	RGB Mode
00	SYNC+DE mode
01	SYNC mode
10	DE mode
11	SYNC+DE mode

6.1.3 RGB Interface Timing

The timing chart of RGB interface DE mode is shown as follows.

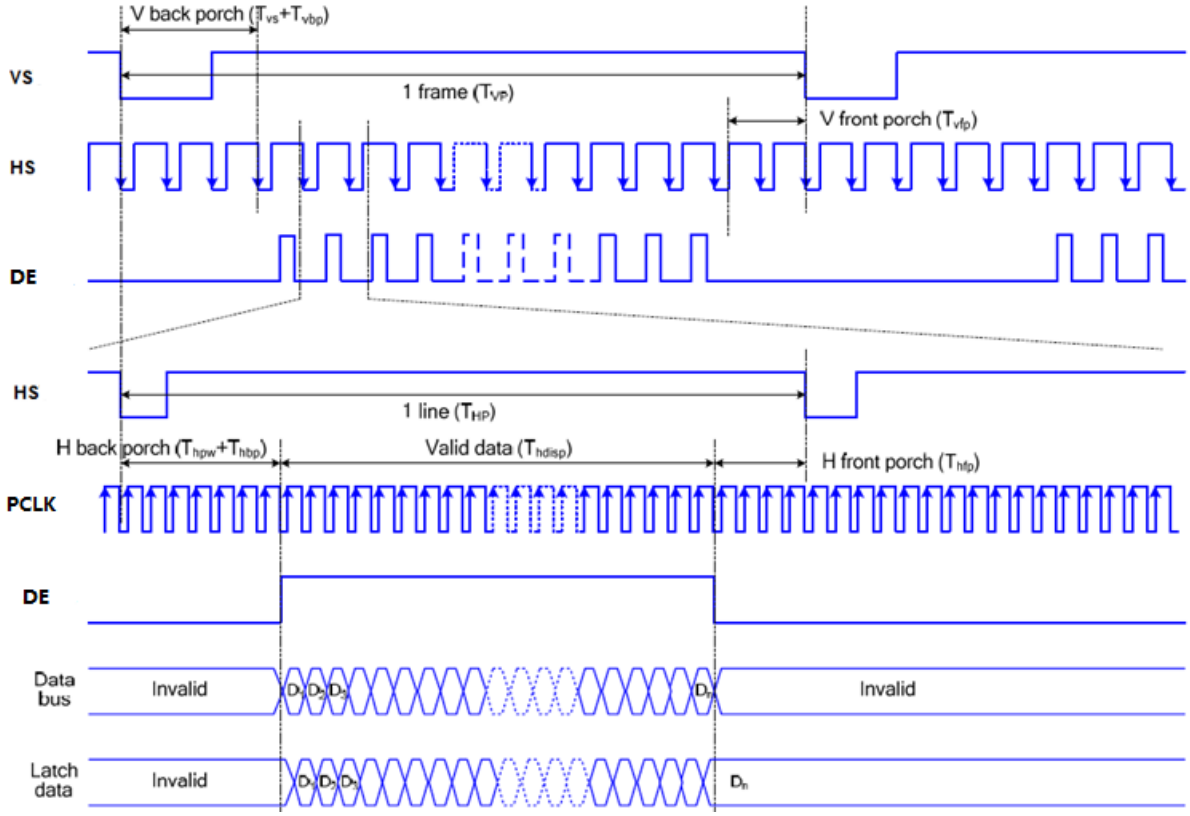

Timing Chart of Signals in RGB Interface DE Mode

Note: The setting of front porch and back porch in host must match that in IC as this mode.

The timing chart of RGB interface SYNC mode is shown as follows.

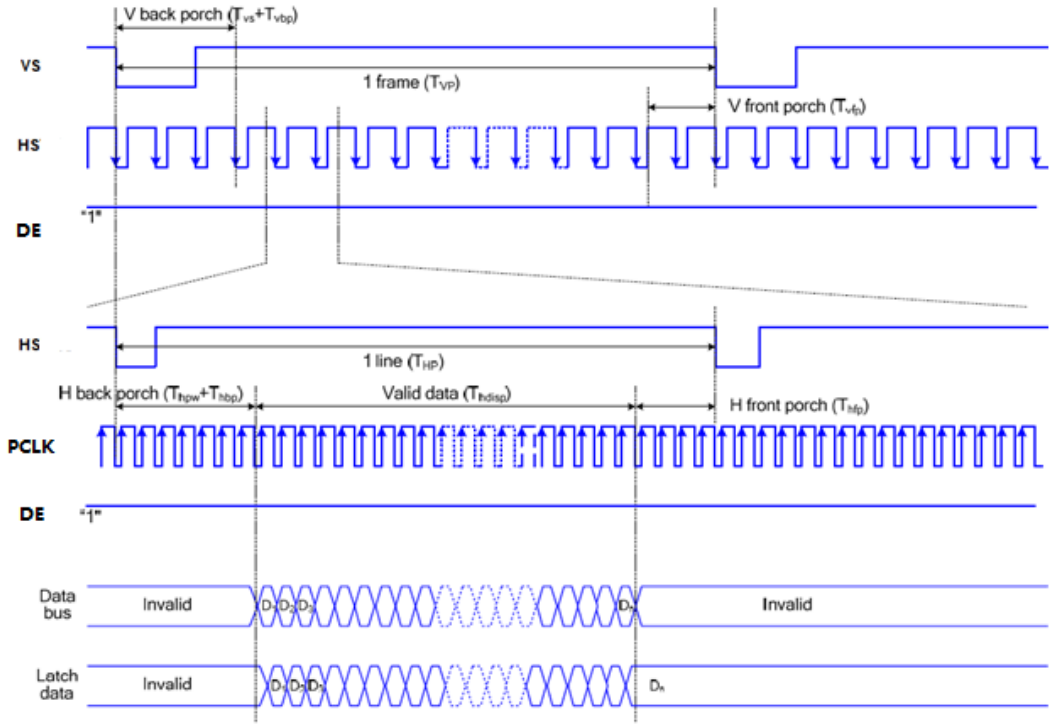

Timing chart of RGB interface SYNC mode

Below Table provide the timing parameter by external Vertical-cycle

(Resolution for 720/640 horizontal x 1280 vertical display with Frame-Rate of 60Hz)

Parameters	Symbols	Min.	Typ	Max.	Unit
Horizontal Synchronization	hpw	-	2	-	PCLK
Horizontal Back Porch	hbp	-	42	-	PCLK
Horizontal Front Porch	hfp	-	44	-	PCLK
Hsync+ HBP+ HFP	-	-	88*Note1	-	PCLK
Horizontal Address (Display area)	hdisp	-	720	-	PCLK
Horizontal cycle	-	-	12.703	-	us
Vertical Synchronization	VS	-	2	-	Line
Vertical Back Porch	vbp	-	14	-	Line
Vertical Front Porch	vfp	-	16	-	Line
Vsync+ VBP+ VFP	-	-	32	-	Line
Vertical Address (Display area)	vdisp	-	1280	-	Line
Vertical cycle	-	-	16.66	16.181	ms
Frame-Rate	-	-	60	61.8	Hz

"-" means no limit.

Note : 1. If using Image Process Algorithm, Type value for H-blanking is minimum requirement.

6.2. Serial Interface (SPI)

The serial interface is used to communication between the micro controller and the LCD driver chip. It contains CSX (chip select), SCL (serial clock), SDI (serial data input) and SDO (serial data output). Serial clock (SCL) is used for interface with MPU only, so it can be stopped when no communication is necessary. If the host places the SDI line into high-impedance state during the read intervals, then the SDI and SDO can be tied together.

6.2.1. SPI write mode

The write mode of the interface means the micro controller writes commands and data to the NV3052CGRB. The serial interface is initialized when CSX is high. In this state, SCL clock pulse or SDI data have no effect. A falling edge on CSX enables the serial interface and indicates the start of data transmission. When CSX is high, SCL clock is ignored. During the high time of CSX the serial interface is initialized. At the falling CSX edge, SCL can be high or low. SDI / SDO is sampled at the rising edge of SCL. R/W indicates, whether the byte is read command(R/W = '1') or write command (R/W = '0'). It is sampled when first rising SCL edge. If CSX stays low after the last bit of command/data byte, the serial interface expects the R/W bit of the next byte at the next rising edge of SCL.

Register Write: Singal Parameter

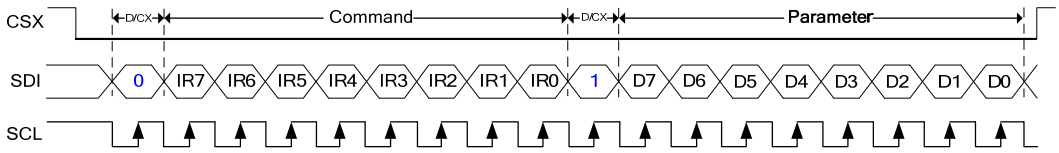

Figure: SPI Protocol for write

6.2.2. SPI read mode

The read mode of the interface means that the micro controller reads register value from the NV3052CGRB. To do so the micro controller first has to send a command and then the following byte is transmitted in the opposite direction. After that CSX is required to go high before a new command is send. The NV3052CGRB samples the SDI (input data) at the rising edges, but shifts SDO (output data) at the falling SCL edges.

Thus the micro controller is supported to read data at the rising SCL edges. After the read status command has been sent, the SDI line must be set to tri-state no later than at the falling SCL edge of the last bit. For the memory data read, a dummy clock cycle is needed (8 SCL clocks) to wait the memory data send out in SPI interface. But it doesn't need any dummy clock when execute the command data read.

Register Read: Without dummy clock

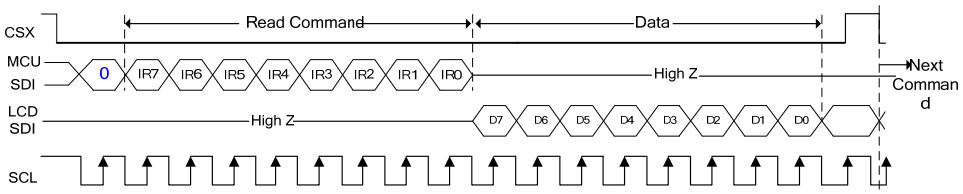

Figure: SPI Protocol for register read mode

6.3. Sleep Out-Command And Self-Diagnostic Functions Of The Display Module

6.3.1. Register loading detection

Sleep Out-command is a trigger for an internal function of the display module, which indicates, if the display module loading function of factory default values from OTP (one-time programming memory) to registers of the display controller is working properly.

There are compared factory values of the OTP and register values of the display controller by the display controller. If those both values (OTP and register values) are same, there is inverted (=increased by 1) a bit in "Read Display Self-Diagnostic Result (0Fh)" (=RDDSDR) (The used bit of this command is D7). If those both values are not same, this bit (D7) is not inverted (= increased by 1).

The flow chart for this internal function is following:

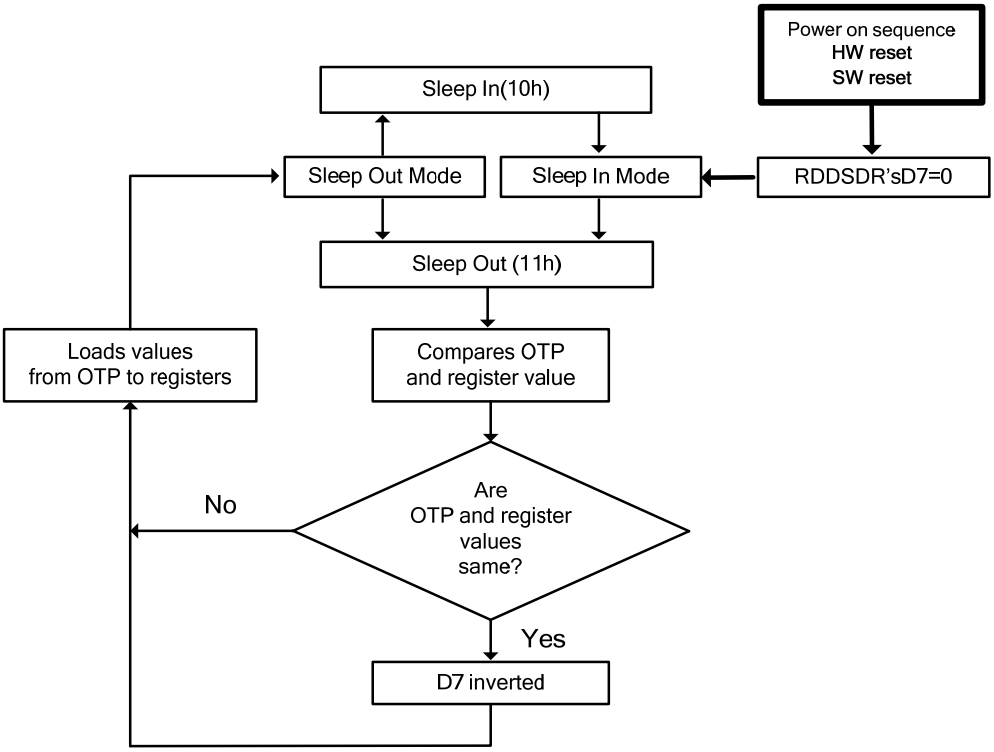

6.3.2. Functionality detection

Sleep Out-command is a trigger for an internal function of the display module, which indicates, if the display module is still running and meets functionality requirements.

The internal function (= the display controller) is comparing, if the display module is still meeting functionality requirements (only Booster voltage level). If functionality requirement is met, there is inverted (= increased by 1) a bit in "Read Display Self- Diagnostic Result (0Fh)" (=RDDSDR) (The used bit of this command is D6). If functionality requirement is not same, this bit (D6) is not inverted (= increased by 1).

The flow chart for this internal function is following:

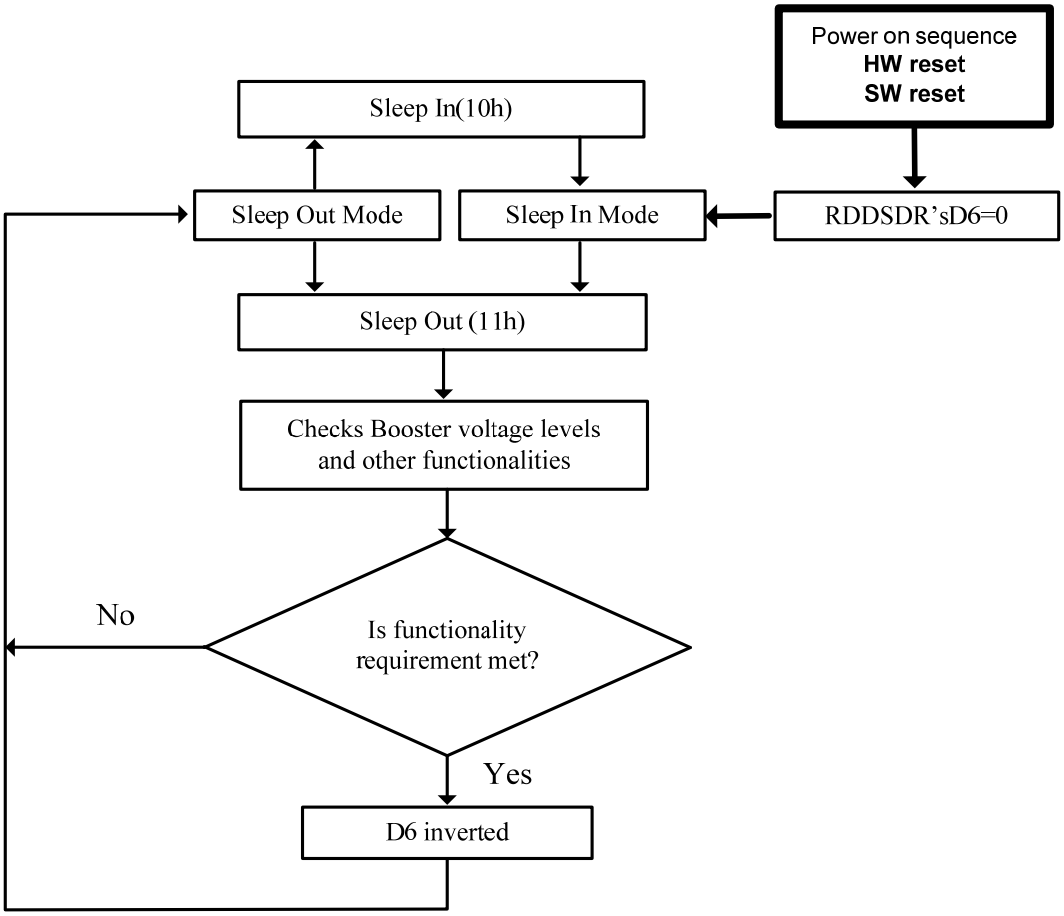

Note: There is needed 120msec after Sleep Out -command, when there is changing from Sleep In –mode to Sleep Out -mode, before there is possible to check if functionality requirements are met and a value of RDDSDR's D6 is valid. Otherwise, there is 5msec delay for D6's value, when Sleep Out –command is sent in Sleep Out -mode.

6.4. Power On/Off Sequence

IOVCC and VCI can be applied in any order. IOVCC and VCI can be powered down in any order.

During power off, if LCD is in the Sleep Out mode, VCI and IOVCC must be powered down minimum 120msec after RESX has been released.

During power off, if LCD is in the Sleep In mode, IOVCC or VCI can be powered down minimum 0msec after RESX has been released.

CSX can be applied at any timing or can be permanently grounded. RESX has priority over CSX.

Note 1: There will be no damage to the display module if the power sequences are not met.

Note 2: There will be no abnormal visible effects on the display panel during the Power On/Off Sequences.

Note 3: There will be no abnormal visible effects on the display between end of Power On Sequence and before receiving Sleep Out command.

Also between receiving Sleep In command and Power Off Sequence.

If RESX line is not held stable by host during Power On Sequence, then it will be necessary to apply a Hardware Reset (RESX) after Host Power On Sequence is complete to ensure correct operation. Otherwise function is not guaranteed.

The power on/off sequence is illustrated below:

6.4.1. Case 1 – RESX line is held high or unstable by host at power on

If RESX line is held High or unstable by the host during Power On, then a Hardware Reset must be applied after both VCI and IOVCC have been applied – otherwise correct functionality is not guaranteed. There is no timing restriction upon this hardware reset.

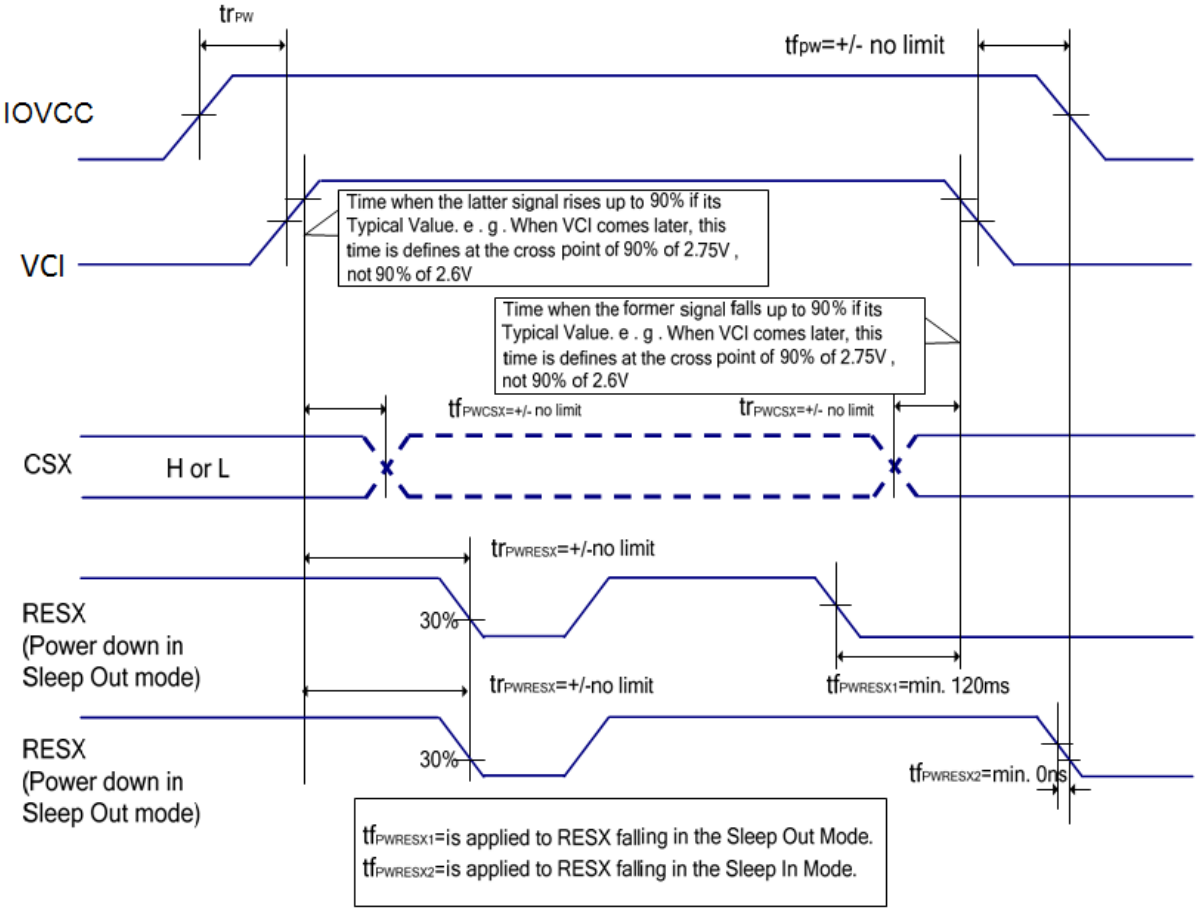

6.4.2. Case 2 – RESX line is held low or unstable by host at power on

If RESX line is held Low (and stable) by the host during Power On, then the RESX must be held low for minimum 10sec after both VCI and IOVCC have been applied.

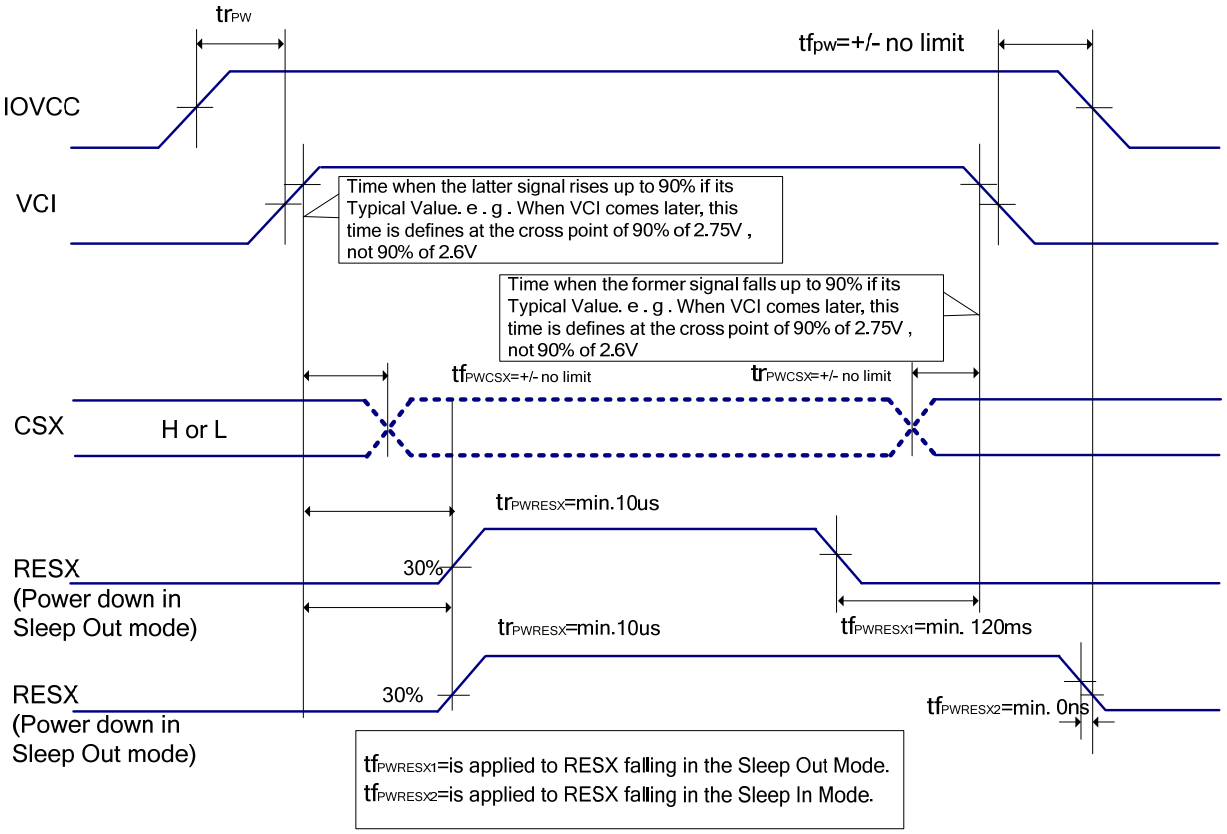

6.4.3. Uncontrolled power off

The uncontrolled power off means a situation when e.g. there is removed a battery without the controlled power off sequence. There will not be any damages for the display module or the display module will not cause any damages for the host or lines of the interface.

At an uncontrolled power off the display will go blank and there will not be any visible effects within (TBD) second on the display (blank display) and remains blank until “Power On Sequence” powers it up.

7. ELECTRICAL SPECIFICATION

7.1. Absolute Maximum Ratings

(VCI=2.5V~6.0V, IOVCC = 1.65V~3.6V, Ta = -30℃~ 85℃)

Parameter	Symbol	Rating	Unit	Note
Power Supply Voltage 1	IOVCC-VSS	-0.3 ~ +4.5	V	
Power Supply Voltage 3	VCI-VSS	-0.3 ~ +6.6	V	
Power Supply Voltage 4	VPP-VSS	-0.3 ~ +7.8	V	
Power Supply Voltage 5	DVDD-VSS	-0.3 ~ +1.8	V	
Power Supply Voltage 6	VSP-VSS	-0.3 ~ +6.6	V	
Power Supply Voltage 7	VSS-VSN	-0.3 ~ +6.6	V	
Power Supply Voltage 8	VGH-VGL	-0.3 ~ +32	V	
Input Voltage	Vt	-0.3 ~ IOVCC +0.3	V	
Operating Temperature	Topr	-30 ~ +85	℃	
Storage Temperature	Tstg	-40 ~ +125	℃	

Note: If the absolute maximum rating of even is one of the above parameters is exceeded even momentarily, the quality of the product may be degraded. Absolute maximum ratings, therefore, specify the values exceeding which the product may be physically damaged. Be sure to use the product within the range of the absolute maximum ratings.

7.2. DC characteristic

7.2.1. Basic DC characteristic

(VCI=2.5V~6.0V, IOVCC = 1.65V~3.6V, Ta = -30℃ ~ 85℃)

Parameter	Symbol	Conditions	Specification			Unit	Notes
			MIN	TYP	MAX		
Power & Operation Voltage							
Analog Operating voltage	VCI	Operating Voltage	2.5	2.8	6.0	V	
Logic Operating voltage	IOVCC	I/O supply voltage	1.65	1.8	3.6	V	
Input/Output							
Logic High level input voltage	VIH	-	0.7*IOVCC	-	IOVCC	V	
Logic Low level input voltage	VIL	-	VSS	-	0.3*IOVCC	V	
Logic High level output voltage	VOH	IOH = -0.1mA	0.8*IOVCC	-	IOVCC	V	
Logic Low level output voltage	VOL	IOL = +0.1mA	VSS	-	0.2*IOVCC	V	
Logic Input leakage current	IIL	Vin=IOVCC or VSSI	-0.1	-	+0.1	uA	
VCOM Operation							
VCOM voltage	VCOM	-	-3.375	-1.0	0	V	
Source Driver							
Source output range	Vsout	-	VGMN+0.1	-	VGMP-0.1	V	
Gamma positive reference voltage	VGMP	-	2.62	-	5.68	V	
Gamma negative reference voltage	VGMN	-	-5.68	-	-2.62	V	
Source output settling time	Tr	Below with 99% precision	-	TBD	-	us	
Output deviation voltage (Source positive output channel)	V,dev	Sout >=+4.2V, Sout<=+0.8V	-	-	TBD	mV	
		+4.2V>Sout>+0.8V	-	-	TBD	mV	
Output deviation voltage (Source negative output channel)	V,dev	Sout <=-4.2V, Sout>=-0.8V	-	-	TBD	mV	
		-4.2V<Sout<-0.8V	-	-	TBD	mV	

Output offset voltage	VOFFSET	-	-	-	TBD	mV	
Reference Voltage							
Internal reference voltage	VREF		1.876	2.00	2.125	V	
Booster operation							
1st booster output voltage	VSP		4.5		6	V	
	VSN		-6		-4.5	V	
2ndbooster output voltage	VGH		11.0		20.5	V	
	VGL		-15.5		-7.0	V	
Current Consumption							
Sleep-IN mode	IIOVCC	RESX=High		TBD	TBD	uA	Note2
	IVCI			TBD	TBD	uA	
Deep standby mode	IIOVCC	RESX=High		TBD	TBD	uA	
	IVCI			TBD	TBD	uA	

Note1. The power/temperature conditions for Current consumption (Sleep-IN) part is VCI=3.0V, IOVCC=1.8V@25℃

(These values might be updated after further evaluation.)

7.3. AC characteristic

7.3.1. Reset timing characteristics

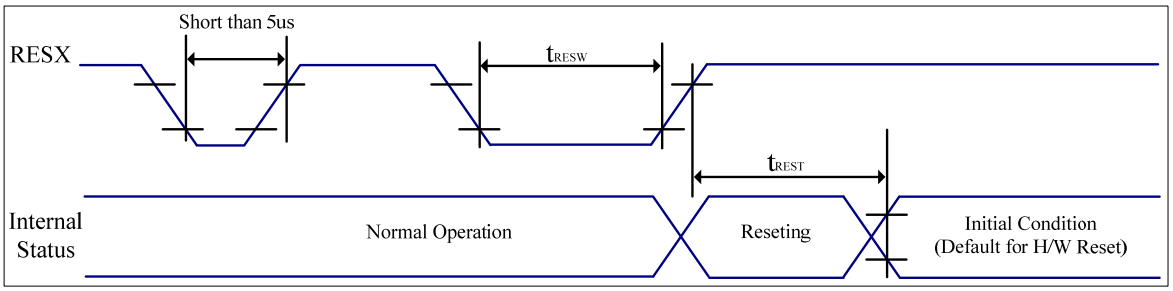

VSS=0V, IOVCC=1.65V to 3.6V, VCI=2.5V to 6.0V,Ta = -30℃ to 85℃

Symbol	Parameter	Related Pins	MIN	TYP	MAX	Note	Unit
t_{RESW}	*1) Reset low pulse width	RESX	10	-	-	-	us
t_{REST}	*2) Reset complete time	-	-	-	5	When reset applied during Sleep in mode	ms
		-	-	-	120	When reset applied during Sleep out mode	ms

Table: Reset input timing

Note 1: Due to an electrostatic discharge on RESX line,spike does not cause irregular system reset according to the table below.

RESX Pulse	Action
Shorter than 5us	Reset Rejected
Longer than 10us	Reset
Between 5us and 10us	Reset starts (It depends on voltage and temperature condition.)

Note 2: During the resetting period, the display will be blanked (The display is entering blanking sequence, which maximum time is 120ms, when Reset Starts in Sleep Out mode. The display remains the blank state in Sleep In mode) , then return to default condition for H/W reset.

Note 3: During Reset Complete Time, ID1/ID2/ID3 and VCOM value in OTP will be latched to internal register. After a rising edge of RESX, there is a H/W reset complete time (Trest) which lasted 5ms..The loading operation will be done every time during this reset.

Note 4: Spike Rejection also applies during a valid reset pulse as shown below:

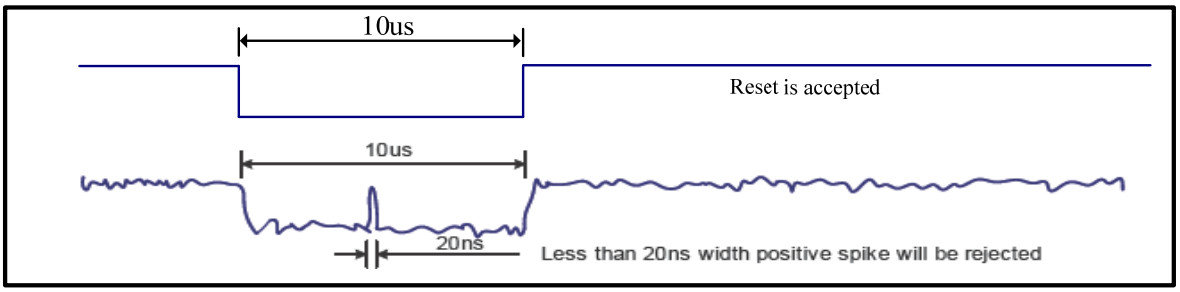

Note 5. It is necessary to wait 5msec after releasing RESX before sending commands. Also Sleep Out command cannot be sent for 120 msec.

7.3.2. Parallel 24/18/16-bit RGB Interface Timing Characteristics

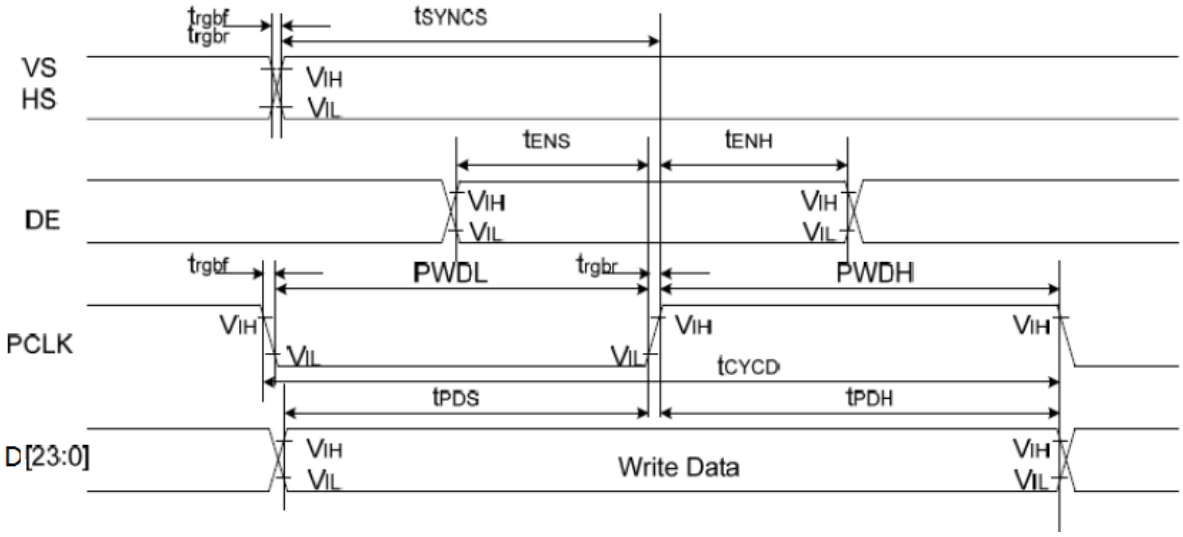

Signal	Symbol	Parameter	min	max	Unit	Description
VS/HS	t_{SYNCS}	VS/HS setup time	5	-	ns	24/18/16-bit bus RGB interface mode
	t_{SYNCH}	VS/HS hold time	5	-	ns	
DE	t_{ENS}	DE setup time	5	-	ns	
	t_{ENH}	DE hold time	5	-	ns	
D[23:0]	t_{POS}	Data setup time	5	-	ns	
	t_{PDH}	Data hold time	5	-	ns	
PCLK	PWDH	PCLK high-level period	13	-	ns	
	PWDL	PCLK low-level period	13	-	ns	
	t_{CYCD}	PCLK cycle time	28	-	ns	
	t_{rgbr},t_{rgbf}	PCLK,HS,VS rise/fall time	-	15	ns	

Note 1: IOVCC=1.65 to 3.6V, VCI=2.5 to 6V, VSSA=VSS=0V, Ta=-30 to 85℃

7.3.3. Serial interface characteristics (SPI)

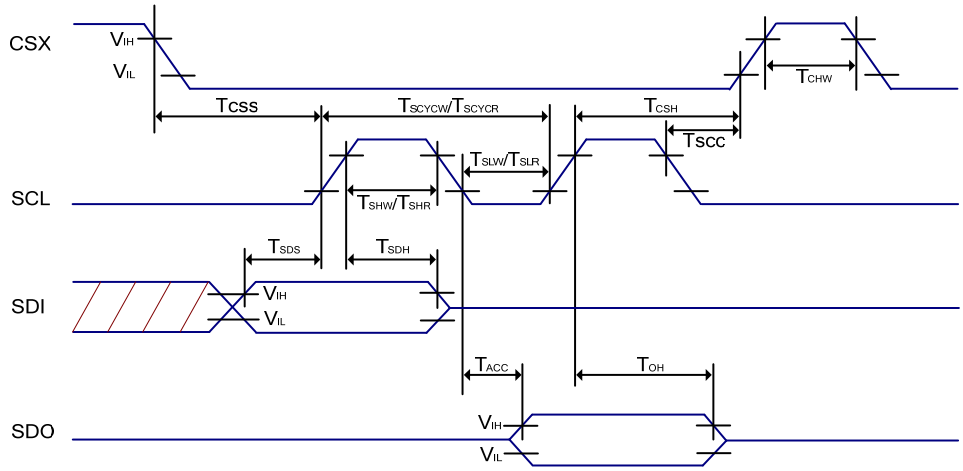

Figure: 3-pin Serial Interface Characteristics

Table: SPI Interface Characteristics

Signal	Symbol	Parameter	MIN	MAX	Unit	Description
CSX	T_{CSS}	Chip select setup time	15	-	ns	-
	T_{CSH}	Chip select hold time	15	-	ns	
	T_{SCC}	Chip select setup time	20	-	ns	
	T_{CHW}	Chip "H" pulse width	40	-	ns	
SCL	T_{SCYCW}	Serial clock cycle (Write)	66	-	ns	-
	T_{SHW}	SCL "H" pulse width (Write)	10	-	ns	
	T_{SLW}	SCL "L" pulse width (Write)	10	-	ns	
	T_{SCYCR}	Serial clock cycle (Read)	150	-	ns	-
	T_{SHR}	SCL"H" pulse width (Read)	60	-	ns	
	T_{SLR}	SCL"L" pulse width (Read)	60	-	ns	
SDI	TSDS	Data setup time	10	-	ns	-
	T_{SDH}	Data hold time	10	-	ns	
	T_{ACC}	Access time	10	50	ns	For maximum C_L=30pF For minimum C_L=8pF
	T_{OH}	Output disable time	15	50	ns	

Note 1: IOVCC=1.65 to 3.6V, VCI=2.5 to 6V, VSSA=VSS=0V, Ta=-30 to 85℃

Note 2: The rise time and fall time (tr, tf) of input signal is specified at 15 ns or less. Logic high and low levels are specified as 30% and 70% of IOVCC for Input signals.

8. CHIP INFORMATION

8.1. PAD Assignment

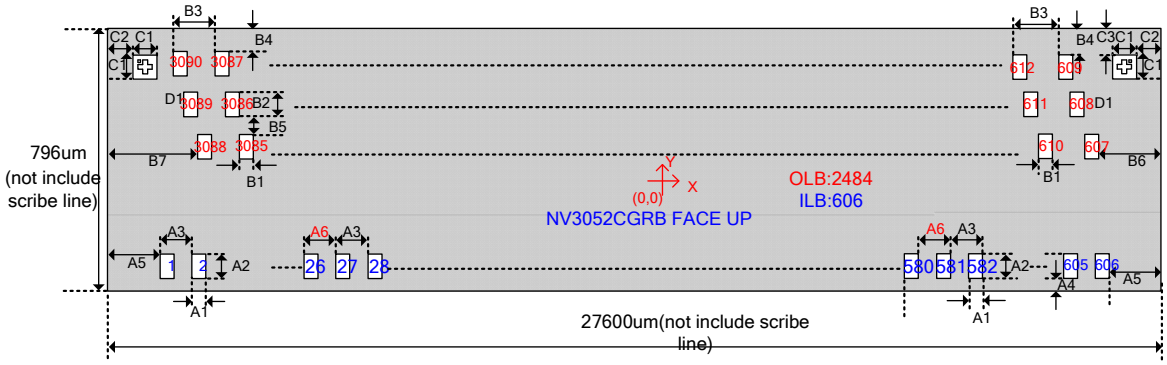

Symbol	Size	Symbol	Size	Symbol	Size
A1	30	B1	16	B7	160.4
A2	48	B2	65	C1	50
A3	45	B3	33	C2	69
A4	13	B4	13	C3	13
A5	166.5	B5	25	Unit: um	
A6	55	B6	138.4		

Note: There is temperature compensation design.

Maximum layout resistance:

Name	Type	Maximum layout resistance	Unit
IOVCC	Power supply	10	Ω
VCI	Power supply	10	Ω
VSP,VSN, CSP, CSN	Power supply	10	Ω
DGND	Power supply	10	Ω
AGND	Power supply	10	Ω
VSSI	Power supply	10	Ω
CGND1	Power supply	10	Ω
RGND	Power supply	10	Ω
PPRECH	Input/Output	10	Ω
VPP	Power supply	10	Ω
BOOSTM[1:0]	Input	100	Ω
EXTP, EXTN	Output	30	Ω
SCL,CSX,RESX	Input	100	Ω
SDI	Input/Output	100	Ω
SDO	Output	100	Ω
TE, TE1	Output	100	Ω
LEDPWM	Output	100	Ω
DVDD	Output	10	Ω
VGMP, VGMN	Output	10	Ω
VREF	Output	10	Ω
VGL	Output	10	Ω
ATEST[2:1]	Output	100	Ω
GOUT_L[22:1]	Output	30	Ω
GOUT_R[22:1]	Output	30	Ω
VCOM_L, VCOM_R	Output	10	Ω
HS, VS, PCLK, DE, D[23:0]	Input	30	Ω
TEST_EN, BIST_EN, SPI_EN, CLK_SEL	Input	100	Ω
EXT_CLK, TEST[3:0]	Input	30	Ω
TOUT[3:0]	Output	30	Ω

8.2. PAD Location

No.	Pad name	X- axis	Y- axis	No.	Pad name	X- axis	Y- axis	No.	Pad name	X- axis	Y- axis
1	DUMMY1	-13622.5	-361	43	DUMMY	-11722.5	-361	85	DUMMY	-9832.5	-361
2	GOUT_L[1]	-13577.5	-361	44	DUMMY	-11677.5	-361	86	DUMMY	-9787.5	-361
3	GOUT_L[2]	-13532.5	-361	45	DUMMY	-11632.5	-361	87	DUMMY	-9742.5	-361
4	GOUT_L[3]	-13487.5	-361	46	DUMMY	-11587.5	-361	88	DUMMY	-9697.5	-361
5	GOUT_L[4]	-13442.5	-361	47	DUMMY	-11542.5	-361	89	DUMMY	-9652.5	-361
6	GOUT_L[5]	-13397.5	-361	48	DUMMY	-11497.5	-361	90	DUMMY	-9607.5	-361
7	GOUT_L[6]	-13352.5	-361	49	DUMMY	-11452.5	-361	91	DUMMY	-9562.5	-361
8	GOUT_L[7]	-13307.5	-361	50	DUMMY	-11407.5	-361	92	DUMMY	-9517.5	-361
9	GOUT_L[8]	-13262.5	-361	51	DUMMY	-11362.5	-361	93	DUMMY	-9472.5	-361
10	GOUT_L[9]	-13217.5	-361	52	DUMMY	-11317.5	-361	94	DUMMY	-9427.5	-361
11	GOUT_L[10]	-13172.5	-361	53	DUMMY	-11272.5	-361	95	DUMMY	-9382.5	-361
12	GOUT_L[11]	-13127.5	-361	54	DUMMY	-11227.5	-361	96	DUMMY	-9337.5	-361
13	GOUT_L[12]	-13082.5	-361	55	DUMMY	-11182.5	-361	97	DUMMY	-9292.5	-361
14	GOUT_L[13]	-13037.5	-361	56	DUMMY	-11137.5	-361	98	DUMMY	-9247.5	-361
15	GOUT_L[14]	-12992.5	-361	57	DUMMY	-11092.5	-361	99	DUMMY	-9202.5	-361
16	GOUT_L[15]	-12947.5	-361	58	DUMMY	-11047.5	-361	100	DUMMY	-9157.5	-361
17	GOUT_L[16]	-12902.5	-361	59	DUMMY	-11002.5	-361	101	DUMMY	-9112.5	-361
18	GOUT_L[17]	-12857.5	-361	60	DUMMY	-10957.5	-361	102	DUMMY	-9067.5	-361
19	GOUT_L[18]	-12812.5	-361	61	DUMMY	-10912.5	-361	103	DUMMY	-9022.5	-361
20	GOUT_L[19]	-12767.5	-361	62	DUMMY	-10867.5	-361	104	DUMMY	-8977.5	-361
21	GOUT_L[20]	-12722.5	-361	63	DUMMY	-10822.5	-361	105	DUMMY	-8932.5	-361
22	GOUT_L[21]	-12677.5	-361	64	DUMMY	-10777.5	-361	106	DUMMY	-8887.5	-361
23	GOUT_L[22]	-12632.5	-361	65	DUMMY	-10732.5	-361	107	DUMMY	-8842.5	-361
24	VCOM_L	-12587.5	-361	66	DUMMY	-10687.5	-361	108	DUMMY	-8797.5	-361
25	VCOM_L	-12542.5	-361	67	DUMMY	-10642.5	-361	109	DUMMY	-8752.5	-361
26	VCOM_L	-12497.5	-361	68	DUMMY	-10597.5	-361	110	DUMMY	-8707.5	-361
27	AGND	-12442.5	-361	69	DUMMY	-10552.5	-361	111	DUMMY	-8662.5	-361
28	AGND	-12397.5	-361	70	DUMMY	-10507.5	-361	112	DUMMY	-8617.5	-361
29	AGND	-12352.5	-361	71	DUMMY	-10462.5	-361	113	DUMMY	-8572.5	-361
30	AGND	-12307.5	-361	72	DUMMY	-10417.5	-361	114	DUMMY	-8527.5	-361
31	AGND	-12262.5	-361	73	DUMMY	-10372.5	-361	115	DUMMY	-8482.5	-361
32	AGND	-12217.5	-361	74	DUMMY	-10327.5	-361	116	DUMMY	-8437.5	-361
33	AGND	-12172.5	-361	75	DUMMY	-10282.5	-361	117	DUMMY	-8392.5	-361
34	AGND	-12127.5	-361	76	DUMMY	-10237.5	-361	118	DUMMY	-8347.5	-361
35	AGND	-12082.5	-361	77	DUMMY	-10192.5	-361	119	DUMMY	-8302.5	-361
36	AGND	-12037.5	-361	78	DUMMY	-10147.5	-361	120	DUMMY	-8257.5	-361
37	AGND	-11992.5	-361	79	DUMMY	-10102.5	-361	121	DUMMY	-8212.5	-361
38	AGND	-11947.5	-361	80	DUMMY	-10057.5	-361	122	DUMMY	-8167.5	-361
39	DUMMY	-11902.5	-361	81	DUMMY	-10012.5	-361	123	DUMMY	-8122.5	-361
40	DUMMY	-11857.5	-361	82	DUMMY	-9967.5	-361	124	DUMMY	-8077.5	-361
41	DUMMY	-11812.5	-361	83	DUMMY	-9922.5	-361	125	DUMMY	-8032.5	-361
42	DUMMY	-11767.5	-361	84	DUMMY	-9877.5	-361	126	DUMMY	-7987.5	-361

No.	Pad name	X- axis	Y-axis	No.	Pad name	X- axis	Y-axis	No.	Pad name	X- axis	Y- axis
127	DUMMY	-7942.5	-361	169	AGND	-6052.5	-361	211	D23	-4162.5	-361
128	DUMMY	-7897.5	-361	170	DGND	-6007.5	-361	212	D23	-4117.5	-361
129	DUMMY	-7852.5	-361	171	DGND	-5962.5	-361	213	D23	-4072.5	-361
130	DUMMY	-7807.5	-361	172	DGND	-5917.5	-361	214	D22	-4027.5	-361
131	DUMMY	-7762.5	-361	173	DGND	-5872.5	-361	215	D22	-3982.5	-361
132	DUMMY	-7717.5	-361	174	DGND	-5827.5	-361	216	D22	-3937.5	-361
133	DUMMY	-7672.5	-361	175	DGND	-5782.5	-361	217	D22	-3892.5	-361
134	DUMMY	-7627.5	-361	176	DGND	-5737.5	-361	218	D22	-3847.5	-361
135	DUMMY	-7582.5	-361	177	DGND	-5692.5	-361	219	D22	-3802.5	-361
136	DUMMY	-7537.5	-361	178	DGND	-5647.5	-361	220	D21	-3757.5	-361
137	DUMMY	-7492.5	-361	179	VSSI	-5602.5	-361	221	D21	-3712.5	-361
138	DUMMY	-7447.5	-361	180	VSSI	-5557.5	-361	222	IOVCC	-3667.5	-361
139	DUMMY	-7402.5	-361	181	VSSI	-5512.5	-361	223	IOVCC	-3622.5	-361
140	IOVCC	-7357.5	-361	182	VSSI	-5467.5	-361	224	IOVCC	-3577.5	-361
141	IOVCC	-7312.5	-361	183	VSSI	-5422.5	-361	225	IOVCC	-3532.5	-361
142	IOVCC	-7267.5	-361	184	VSSI	-5377.5	-361	226	IOVCC	-3487.5	-361
143	IOVCC	-7222.5	-361	185	TOUT3	-5332.5	-361	227	IOVCC	-3442.5	-361
144	IOVCC	-7177.5	-361	186	TOUT3	-5287.5	-361	228	VSSI	-3397.5	-361
145	IOVCC	-7132.5	-361	187	TOUT2	-5242.5	-361	229	VSSI	-3352.5	-361
146	IOVCC	-7087.5	-361	188	TOUT2	-5197.5	-361	230	VSSI	-3307.5	-361
147	IOVCC	-7042.5	-361	189	TOUT1	-5152.5	-361	231	VSSI	-3262.5	-361
148	IOVCC	-6997.5	-361	190	TOUT1	-5107.5	-361	232	VSSI	-3217.5	-361
149	IOVCC	-6952.5	-361	191	TOUT0	-5062.5	-361	233	VSSI	-3172.5	-361
150	IOVCC	-6907.5	-361	192	TOUT0	-5017.5	-361	234	D20	-3127.5	-361
151	IOVCC	-6862.5	-361	193	DUMMY	-4972.5	-361	235	D20	-3082.5	-361
152	IOVCC	-6817.5	-361	194	DUMMY	-4927.5	-361	236	D20	-3037.5	-361
153	IOVCC	-6772.5	-361	195	VSN	-4882.5	-361	237	D20	-2992.5	-361
154	IOVCC	-6727.5	-361	196	VSN	-4837.5	-361	238	D19	-2947.5	-361
155	AGND	-6682.5	-361	197	VSN	-4792.5	-361	239	D19	-2902.5	-361
156	AGND	-6637.5	-361	198	VSN	-4747.5	-361	240	D[7]	-2857.5	-361
157	AGND	-6592.5	-361	199	VSN	-4702.5	-361	241	D[7]	-2812.5	-361
158	AGND	-6547.5	-361	200	DUMMY	-4657.5	-361	242	D[6]	-2767.5	-361
159	AGND	-6502.5	-361	201	DUMMY	-4612.5	-361	243	D[6]	-2722.5	-361
160	AGND	-6457.5	-361	202	DUMMY	-4567.5	-361	244	D[5]	-2677.5	-361
161	AGND	-6412.5	-361	203	VSP	-4522.5	-361	245	D[5]	-2632.5	-361
162	AGND	-6367.5	-361	204	VSP	-4477.5	-361	246	D[4]	-2587.5	-361
163	AGND	-6322.5	-361	205	VSP	-4432.5	-361	247	D[4]	-2542.5	-361
164	AGND	-6277.5	-361	206	VSP	-4387.5	-361	248	D[3]	-2497.5	-361
165	AGND	-6232.5	-361	207	VSP	-4342.5	-361	249	D[3]	-2452.5	-361
166	AGND	-6187.5	-361	208	D23	-4297.5	-361	250	D[2]	-2407.5	-361
167	AGND	-6142.5	-361	209	D23	-4252.5	-361	251	D[2]	-2362.5	-361
168	AGND	-6097.5	-361	210	D23	-4207.5	-361	252	D[1]	-2317.5	-361

No.	Pad name	X- axis	Y-axis	No.	Pad name	X- axis	Y-axis	No.	Pad name	X- axis	Y- axis
253	D[1]	-2272.5	-361	295	BIST_EN	-382.5	-361	337	DUMMY	1507.5	-361
254	D[0]	-2227.5	-361	296	TEST[3]	-337.5	-361	338	PPRECH	1552.5	-361
255	D[0]	-2182.5	-361	297	TEST[2]	-292.5	-361	339	PPRECH	1597.5	-361
256	HS	-2137.5	-361	298	TEST[1]	-247.5	-361	340	PPRECH	1642.5	-361
257	HS	-2092.5	-361	299	TEST[0]	-202.5	-361	341	PPRECH	1687.5	-361
258	VS	-2047.5	-361	300	VSSI	-157.5	-361	342	PPRECH	1732.5	-361
259	VS	-2002.5	-361	301	VSSI	-112.5	-361	343	PPRECH	1777.5	-361
260	D18	-1957.5	-361	302	DUMMY	-67.5	-361	344	PPRECH	1822.5	-361
261	D18	-1912.5	-361	303	DUMMY	-22.5	-361	345	PPRECH	1867.5	-361
262	PCLK	-1867.5	-361	304	IOVCC	22.5	-361	346	PPRECH	1912.5	-361
263	PCLK	-1822.5	-361	305	IOVCC	67.5	-361	347	PPRECH	1957.5	-361
264	DE	-1777.5	-361	306	DUMMY	112.5	-361	348	DGND	2002.5	-361
265	DE	-1732.5	-361	307	DUMMY	157.5	-361	349	DGND	2047.5	-361
266	CSX	-1687.5	-361	308	DUMMY	202.5	-361	350	DGND	2092.5	-361
267	CSX	-1642.5	-361	309	DUMMY	247.5	-361	351	DGND	2137.5	-361
268	SCL	-1597.5	-361	310	NC	292.5	-361	352	DGND	2182.5	-361
269	SCL	-1552.5	-361	311	NC	337.5	-361	353	VSSI	2227.5	-361
270	SDI	-1507.5	-361	312	IOVCC	382.5	-361	354	VSSI	2272.5	-361
271	SDI	-1462.5	-361	313	IOVCC	427.5	-361	355	VSSI	2317.5	-361
272	SDO	-1417.5	-361	314	RS[1]	472.5	-361	356	VSSI	2362.5	-361
273	SDO	-1372.5	-361	315	RS[1]	517.5	-361	357	VSSI	2407.5	-361
274	LEDPWM	-1327.5	-361	316	VSSI	562.5	-361	358	EXTN	2452.5	-361
275	LEDPWM	-1282.5	-361	317	VSSI	607.5	-361	359	EXTN	2497.5	-361
276	LEDPWM	-1237.5	-361	318	DUMMY	652.5	-361	360	EXTN	2542.5	-361
277	LEDPWM	-1192.5	-361	319	DUMMY	697.5	-361	361	EXTN	2587.5	-361
278	TE	-1147.5	-361	320	IOVCC	742.5	-361	362	EXTN	2632.5	-361
279	TE	-1102.5	-361	321	IOVCC	787.5	-361	363	EXTN	2677.5	-361
280	TE	-1057.5	-361	322	BOOSTM[0]	832.5	-361	364	EXTN	2722.5	-361
281	TE	-1012.5	-361	323	BOOSTM[0]	877.5	-361	365	EXTN	2767.5	-361
282	TE	-967.5	-361	324	VSSI	922.5	-361	366	EXTP	2812.5	-361
283	TE	-922.5	-361	325	VSSI	967.5	-361	367	EXTP	2857.5	-361
284	TE1	-877.5	-361	326	BOOSTM[1]	1012.5	-361	368	EXTP	2902.5	-361
285	TE1	-832.5	-361	327	BOOSTM[1]	1057.5	-361	369	EXTP	2947.5	-361
286	TE1	-787.5	-361	328	IOVCC	1102.5	-361	370	EXTP	2992.5	-361
287	TE1	-742.5	-361	329	IOVCC	1147.5	-361	371	EXTP	3037.5	-361
288	TE1	-697.5	-361	330	IOVCC	1192.5	-361	372	EXTP	3082.5	-361
289	TE1	-652.5	-361	331	IOVCC	1237.5	-361	373	EXTP	3127.5	-361
290	RESX	-607.5	-361	332	IOVCC	1282.5	-361	374	D17	3172.5	-361
291	RESX	-562.5	-361	333	IOVCC	1327.5	-361	375	D17	3217.5	-361
292	RESX	-517.5	-361	334	DUMMY	1372.5	-361	376	D17	3262.5	-361
293	RESX	-472.5	-361	335	DUMMY	1417.5	-361	377	D17	3307.5	-361
294	TEST_EN	-427.5	-361	336	DUMMY	1462.5	-361	378	D17	3352.5	-361

No.	Pad name	X- axis	Y- axis	No.	Pad name	X- axis	Y- axis	No.	Pad name	X- axis	Y- axis
379	D17	3397.5	-361	421	VCI	5287.5	-361	463	VSP	7177.5	-361
380	SPI_EN	3442.5	-361	422	VCI	5332.5	-361	464	VSP	7222.5	-361
381	SPI_EN	3487.5	-361	423	VCI	5377.5	-361	465	VSP	7267.5	-361
382	SPI_EN	3532.5	-361	424	VCI	5422.5	-361	466	VSP	7312.5	-361
383	SPI_EN	3577.5	-361	425	VCI	5467.5	-361	467	VSP	7357.5	-361
384	SPI_EN	3622.5	-361	426	VCI	5512.5	-361	468	VSN	7402.5	-361
385	SPI_EN	3667.5	-361	427	VCI	5557.5	-361	469	VSN	7447.5	-361
386	SPI_EN	3712.5	-361	428	IOVCC	5602.5	-361	470	VSN	7492.5	-361
387	CLK_SEL	3757.5	-361	429	IOVCC	5647.5	-361	471	VSN	7537.5	-361
388	CLK_SEL	3802.5	-361	430	IOVCC	5692.5	-361	472	VSN	7582.5	-361
389	EXT_CLK	3847.5	-361	431	IOVCC	5737.5	-361	473	CSN	7627.5	-361
390	EXT_CLK	3892.5	-361	432	IOVCC	5782.5	-361	474	CSN	7672.5	-361
391	ATEST1	3937.5	-361	433	D16	5827.5	-361	475	D14	7717.5	-361
392	ATEST1	3982.5	-361	434	D16	5872.5	-361	476	D14	7762.5	-361
393	ATEST2	4027.5	-361	435	D16	5917.5	-361	477	D14	7807.5	-361
394	ATEST2	4072.5	-361	436	D16	5962.5	-361	478	D14	7852.5	-361
395	RGND	4117.5	-361	437	D16	6007.5	-361	479	D14	7897.5	-361
396	RGND	4162.5	-361	438	D16	6052.5	-361	480	D14	7942.5	-361
397	RGND	4207.5	-361	439	D16	6097.5	-361	481	D14	7987.5	-361
398	RGND	4252.5	-361	440	D15	6142.5	-361	482	D13	8032.5	-361
399	AGND	4297.5	-361	441	D15	6187.5	-361	483	D13	8077.5	-361
400	AGND	4342.5	-361	442	D15	6232.5	-361	484	D13	8122.5	-361
401	AGND	4387.5	-361	443	D15	6277.5	-361	485	D13	8167.5	-361
402	AGND	4432.5	-361	444	D15	6322.5	-361	486	D13	8212.5	-361
403	AGND	4477.5	-361	445	D15	6367.5	-361	487	D13	8257.5	-361
404	AGND	4522.5	-361	446	D15	6412.5	-361	488	D13	8302.5	-361
405	AGND	4567.5	-361	447	VSN	6457.5	-361	489	D12	8347.5	-361
406	VGMP	4612.5	-361	448	VSN	6502.5	-361	490	D12	8392.5	-361
407	VGMP	4657.5	-361	449	VSN	6547.5	-361	491	D12	8437.5	-361
408	VGMP	4702.5	-361	450	VSN	6592.5	-361	492	D12	8482.5	-361
409	VGMN	4747.5	-361	451	VSN	6637.5	-361	493	D12	8527.5	-361
410	VGMN	4792.5	-361	452	VSN	6682.5	-361	494	D12	8572.5	-361
411	VGMN	4837.5	-361	453	VSN	6727.5	-361	495	D12	8617.5	-361
412	VREF	4882.5	-361	454	VSP	6772.5	-361	496	D11	8662.5	-361
413	VREF	4927.5	-361	455	VSP	6817.5	-361	497	D11	8707.5	-361
414	VREF	4972.5	-361	456	VSP	6862.5	-361	498	D11	8752.5	-361
415	AGND	5017.5	-361	457	VSP	6907.5	-361	499	D11	8797.5	-361
416	AGND	5062.5	-361	458	VSP	6952.5	-361	500	D11	8842.5	-361
417	AGND	5107.5	-361	459	VSP	6997.5	-361	501	D11	8887.5	-361
418	AGND	5152.5	-361	460	VSP	7042.5	-361	502	D11	8932.5	-361
419	AGND	5197.5	-361	461	CSP	7087.5	-361	503	DVDD	8977.5	-361
420	VCI	5242.5	-361	462	CSP	7132.5	-361	504	DVDD	9022.5	-361

No.	Pad name	X- axis	Y- axis	No.	Pad name	X- axis	Y- axis	No.	Pad name	X- axis	Y- axis
505	DVDD	9067.5	-361	547	VPP	10957.5	-361	589	GOUT_R[17]	12857.5	-361
506	DVDD	9112.5	-361	548	VPP	11002.5	-361	590	GOUT_R[16]	12902.5	-361
507	DVDD	9157.5	-361	549	VPP	11047.5	-361	591	GOUT_R[15]	12947.5	-361
508	DVDD	9202.5	-361	550	VPP	11092.5	-361	592	GOUT_R[14]	12992.5	-361
509	VSSI	9247.5	-361	551	NC	11137.5	-361	593	GOUT_R[13]	13037.5	-361
510	VSSI	9292.5	-361	552	NC	11182.5	-361	594	GOUT_R[12]	13082.5	-361
511	VSSI	9337.5	-361	553	NC	11227.5	-361	595	GOUT_R[11]	13127.5	-361
512	VSSI	9382.5	-361	554	NC	11272.5	-361	596	GOUT_R[10]	13172.5	-361
513	VSSI	9427.5	-361	555	NC	11317.5	-361	597	GOUT_R[9]	13217.5	-361
514	VSSI	9472.5	-361	556	NC	11362.5	-361	598	GOUT_R[8]	13262.5	-361
515	CGND1	9517.5	-361	557	IOVCC	11407.5	-361	599	GOUT_R[7]	13307.5	-361
516	CGND1	9562.5	-361	558	IOVCC	11452.5	-361	600	GOUT_R[6]	13352.5	-361
517	CGND1	9607.5	-361	559	IOVCC	11497.5	-361	601	GOUT_R[5]	13397.5	-361
518	CGND1	9652.5	-361	560	IOVCC	11542.5	-361	602	GOUT_R[4]	13442.5	-361
519	CGND1	9697.5	-361	561	IOVCC	11587.5	-361	603	GOUT_R[3]	13487.5	-361
520	CGND1	9742.5	-361	562	IOVCC	11632.5	-361	604	GOUT_R[2]	13532.5	-361
521	CGND1	9787.5	-361	563	IOVCC	11677.5	-361	605	GOUT_R[1]	13577.5	-361
522	CGND1	9832.5	-361	564	AGND	11722.5	-361	606	DUMMY2	13622.5	-361
523	D10	9877.5	-361	565	AGND	11767.5	-361	607	DUMMY3	13656.5	172.5
524	D10	9922.5	-361	566	AGND	11812.5	-361	608	DUMMY4	13645.5	262.5
525	D10	9967.5	-361	567	AGND	11857.5	-361	609	DUMMY5	13634.5	352.5
526	D10	10012.5	-361	568	AGND	11902.5	-361	610	DUMMY6	13623.5	172.5
527	D10	10057.5	-361	569	AGND	11947.5	-361	611	DUMMY7	13612.5	262.5
528	D10	10102.5	-361	570	AGND	11992.5	-361	612	DUMMY8	13601.5	352.5
529	D10	10147.5	-361	571	VGL	12037.5	-361	613	DUMMY9	13590.5	172.5
530	D9	10192.5	-361	572	VGL	12082.5	-361	614	DUMMY10	13579.5	262.5
531	D9	10237.5	-361	573	VGL	12127.5	-361	615	DUMMY11	13568.5	352.5
532	D9	10282.5	-361	574	VGL	12172.5	-361	616	DUMMY12	13557.5	172.5
533	D9	10327.5	-361	575	VGL	12217.5	-361	617	SDUM3	13546.5	262.5
534	D9	10372.5	-361	576	VGL	12262.5	-361	618	S<2401>	13535.5	352.5
535	D9	10417.5	-361	577	VCOM_DUM	12307.5	-361	619	S<2400>	13524.5	172.5
536	D9	10462.5	-361	578	VCOM_DUM	12352.5	-361	620	S<2399>	13513.5	262.5
537	D8	10507.5	-361	579	DUMMYR1	12397.5	-361	621	S<2398>	13502.5	352.5
538	D8	10552.5	-361	580	DUMMYR1	12442.5	-361	622	S<2397>	13491.5	172.5
539	D8	10597.5	-361	581	VCOM_R	12497.5	-361	623	S<2396>	13480.5	262.5
540	D8	10642.5	-361	582	VCOM_R	12542.5	-361	624	S<2395>	13469.5	352.5
541	D8	10687.5	-361	583	VCOM_R	12587.5	-361	625	S<2394>	13458.5	172.5
542	D8	10732.5	-361	584	GOUT_R[22]	12632.5	-361	626	S<2393>	13447.5	262.5
543	D8	10777.5	-361	585	GOUT_R[21]	12677.5	-361	627	S<2392>	13436.5	352.5
544	VPP	10822.5	-361	586	GOUT_R[20]	12722.5	-361	628	S<2391>	13425.5	172.5
545	VPP	10867.5	-361	587	GOUT_R[19]	12767.5	-361	629	S<2390>	13414.5	262.5
546	VPP	10912.5	-361	588	GOUT_R[18]	12812.5	-361	630	S<2389>	13403.5	352.5

The above “NC”means:The pad don’t connect with inner IC.

No.	Pad name	X- axis	Y- axis	No.	Pad name	X- axis	Y- axis	No.	Pad name	X- axis	Y- axis
631	S<2388>	13392.5	172.5	673	S<2346>	12930.5	172.5	715	S<2304>	12468.5	172.5
632	S<2387>	13381.5	262.5	674	S<2345>	12919.5	262.5	716	S<2303>	12457.5	262.5
633	S<2386>	13370.5	352.5	675	S<2344>	12908.5	352.5	717	S<2302>	12446.5	352.5
634	S<2385>	13359.5	172.5	676	S<2343>	12897.5	172.5	718	S<2301>	12435.5	172.5
635	S<2384>	13348.5	262.5	677	S<2342>	12886.5	262.5	719	S<2300>	12424.5	262.5
636	S<2383>	13337.5	352.5	678	S<2341>	12875.5	352.5	720	S<2299>	12413.5	352.5
637	S<2382>	13326.5	172.5	679	S<2340>	12864.5	172.5	721	S<2298>	12402.5	172.5
638	S<2381>	13315.5	262.5	680	S<2339>	12853.5	262.5	722	S<2297>	12391.5	262.5
639	S<2380>	13304.5	352.5	681	S<2338>	12842.5	352.5	723	S<2296>	12380.5	352.5
640	S<2379>	13293.5	172.5	682	S<2337>	12831.5	172.5	724	S<2295>	12369.5	172.5
641	S<2378>	13282.5	262.5	683	S<2336>	12820.5	262.5	725	S<2294>	12358.5	262.5
642	S<2377>	13271.5	352.5	684	S<2335>	12809.5	352.5	726	S<2293>	12347.5	352.5
643	S<2376>	13260.5	172.5	685	S<2334>	12798.5	172.5	727	S<2292>	12336.5	172.5
644	S<2375>	13249.5	262.5	686	S<2333>	12787.5	262.5	728	S<2291>	12325.5	262.5
645	S<2374>	13238.5	352.5	687	S<2332>	12776.5	352.5	729	S<2290>	12314.5	352.5
646	S<2373>	13227.5	172.5	688	S<2331>	12765.5	172.5	730	S<2289>	12303.5	172.5
647	S<2372>	13216.5	262.5	689	S<2330>	12754.5	262.5	731	S<2288>	12292.5	262.5
648	S<2371>	13205.5	352.5	690	S<2329>	12743.5	352.5	732	S<2287>	12281.5	352.5
649	S<2370>	13194.5	172.5	691	S<2328>	12732.5	172.5	733	S<2286>	12270.5	172.5
650	S<2369>	13183.5	262.5	692	S<2327>	12721.5	262.5	734	S<2285>	12259.5	262.5
651	S<2368>	13172.5	352.5	693	S<2326>	12710.5	352.5	735	S<2284>	12248.5	352.5
652	S<2367>	13161.5	172.5	694	S<2325>	12699.5	172.5	736	S<2283>	12237.5	172.5
653	S<2366>	13150.5	262.5	695	S<2324>	12688.5	262.5	737	S<2282>	12226.5	262.5
654	S<2365>	13139.5	352.5	696	S<2323>	12677.5	352.5	738	S<2281>	12215.5	352.5
655	S<2364>	13128.5	172.5	697	S<2322>	12666.5	172.5	739	S<2280>	12204.5	172.5
656	S<2363>	13117.5	262.5	698	S<2321>	12655.5	262.5	740	S<2279>	12193.5	262.5
657	S<2362>	13106.5	352.5	699	S<2320>	12644.5	352.5	741	S<2278>	12182.5	352.5
658	S<2361>	13095.5	172.5	700	S<2319>	12633.5	172.5	742	S<2277>	12171.5	172.5
659	S<2360>	13084.5	262.5	701	S<2318>	12622.5	262.5	743	S<2276>	12160.5	262.5
660	S<2359>	13073.5	352.5	702	S<2317>	12611.5	352.5	744	S<2275>	12149.5	352.5
661	S<2358>	13062.5	172.5	703	S<2316>	12600.5	172.5	745	S<2274>	12138.5	172.5
662	S<2357>	13051.5	262.5	704	S<2315>	12589.5	262.5	746	S<2273>	12127.5	262.5
663	S<2356>	13040.5	352.5	705	S<2314>	12578.5	352.5	747	S<2272>	12116.5	352.5
664	S<2355>	13029.5	172.5	706	S<2313>	12567.5	172.5	748	S<2271>	12105.5	172.5
665	S<2354>	13018.5	262.5	707	S<2312>	12556.5	262.5	749	S<2270>	12094.5	262.5
666	S<2353>	13007.5	352.5	708	S<2311>	12545.5	352.5	750	S<2269>	12083.5	352.5
667	S<2352>	12996.5	172.5	709	S<2310>	12534.5	172.5	751	S<2268>	12072.5	172.5
668	S<2351>	12985.5	262.5	710	S<2309>	12523.5	262.5	752	S<2267>	12061.5	262.5
669	S<2350>	12974.5	352.5	711	S<2308>	12512.5	352.5	753	S<2266>	12050.5	352.5
670	S<2349>	12963.5	172.5	712	S<2307>	12501.5	172.5	754	S<2265>	12039.5	172.5
671	S<2348>	12952.5	262.5	713	S<2306>	12490.5	262.5	755	S<2264>	12028.5	262.5
672	S<2347>	12941.5	352.5	714	S<2305>	12479.5	352.5	756	S<2263>	12017.5	352.5

No.	Pad name	X- axis	Y- axis	No.	Pad name	X- axis	Y- axis	No.	Pad name	X- axis	Y- axis
757	S<2262>	12006.5	172.5	799	S<2220>	11544.5	172.5	841	S<2178>	11082.5	172.5
758	S<2261>	11995.5	262.5	800	S<2219>	11533.5	262.5	842	S<2177>	11071.5	262.5
759	S<2260>	11984.5	352.5	801	S<2218>	11522.5	352.5	843	S<2176>	11060.5	352.5
760	S<2259>	11973.5	172.5	802	S<2217>	11511.5	172.5	844	S<2175>	11049.5	172.5
761	S<2258>	11962.5	262.5	803	S<2216>	11500.5	262.5	845	S<2174>	11038.5	262.5
762	S<2257>	11951.5	352.5	804	S<2215>	11489.5	352.5	846	S<2173>	11027.5	352.5
763	S<2256>	11940.5	172.5	805	S<2214>	11478.5	172.5	847	S<2172>	11016.5	172.5
764	S<2255>	11929.5	262.5	806	S<2213>	11467.5	262.5	848	S<2171>	11005.5	262.5
765	S<2254>	11918.5	352.5	807	S<2212>	11456.5	352.5	849	S<2170>	10994.5	352.5
766	S<2253>	11907.5	172.5	808	S<2211>	11445.5	172.5	850	S<2169>	10983.5	172.5
767	S<2252>	11896.5	262.5	809	S<2210>	11434.5	262.5	851	S<2168>	10972.5	262.5
768	S<2251>	11885.5	352.5	810	S<2209>	11423.5	352.5	852	S<2167>	10961.5	352.5
769	S<2250>	11874.5	172.5	811	S<2208>	11412.5	172.5	853	S<2166>	10950.5	172.5
770	S<2249>	11863.5	262.5	812	S<2207>	11401.5	262.5	854	S<2165>	10939.5	262.5
771	S<2248>	11852.5	352.5	813	S<2206>	11390.5	352.5	855	S<2164>	10928.5	352.5
772	S<2247>	11841.5	172.5	814	S<2205>	11379.5	172.5	856	S<2163>	10917.5	172.5
773	S<2246>	11830.5	262.5	815	S<2204>	11368.5	262.5	857	S<2162>	10906.5	262.5
774	S<2245>	11819.5	352.5	816	S<2203>	11357.5	352.5	858	S<2161>	10895.5	352.5
775	S<2244>	11808.5	172.5	817	S<2202>	11346.5	172.5	859	S<2160>	10884.5	172.5
776	S<2243>	11797.5	262.5	818	S<2201>	11335.5	262.5	860	S<2159>	10873.5	262.5
777	S<2242>	11786.5	352.5	819	S<2200>	11324.5	352.5	861	S<2158>	10862.5	352.5
778	S<2241>	11775.5	172.5	820	S<2199>	11313.5	172.5	862	S<2157>	10851.5	172.5
779	S<2240>	11764.5	262.5	821	S<2198>	11302.5	262.5	863	S<2156>	10840.5	262.5
780	S<2239>	11753.5	352.5	822	S<2197>	11291.5	352.5	864	S<2155>	10829.5	352.5
781	S<2238>	11742.5	172.5	823	S<2196>	11280.5	172.5	865	S<2154>	10818.5	172.5
782	S<2237>	11731.5	262.5	824	S<2195>	11269.5	262.5	866	S<2153>	10807.5	262.5
783	S<2236>	11720.5	352.5	825	S<2194>	11258.5	352.5	867	S<2152>	10796.5	352.5
784	S<2235>	11709.5	172.5	826	S<2193>	11247.5	172.5	868	S<2151>	10785.5	172.5
785	S<2234>	11698.5	262.5	827	S<2192>	11236.5	262.5	869	S<2150>	10774.5	262.5
786	S<2233>	11687.5	352.5	828	S<2191>	11225.5	352.5	870	S<2149>	10763.5	352.5
787	S<2232>	11676.5	172.5	829	S<2190>	11214.5	172.5	871	S<2148>	10752.5	172.5
788	S<2231>	11665.5	262.5	830	S<2189>	11203.5	262.5	872	S<2147>	10741.5	262.5
789	S<2230>	11654.5	352.5	831	S<2188>	11192.5	352.5	873	S<2146>	10730.5	352.5
790	S<2229>	11643.5	172.5	832	S<2187>	11181.5	172.5	874	S<2145>	10719.5	172.5
791	S<2228>	11632.5	262.5	833	S<2186>	11170.5	262.5	875	S<2144>	10708.5	262.5
792	S<2227>	11621.5	352.5	834	S<2185>	11159.5	352.5	876	S<2143>	10697.5	352.5
793	S<2226>	11610.5	172.5	835	S<2184>	11148.5	172.5	877	S<2142>	10686.5	172.5
794	S<2225>	11599.5	262.5	836	S<2183>	11137.5	262.5	878	S<2141>	10675.5	262.5
795	S<2224>	11588.5	352.5	837	S<2182>	11126.5	352.5	879	S<2140>	10664.5	352.5
796	S<2223>	11577.5	172.5	838	S<2181>	11115.5	172.5	880	S<2139>	10653.5	172.5
797	S<2222>	11566.5	262.5	839	S<2180>	11104.5	262.5	881	S<2138>	10642.5	262.5
798	S<2221>	11555.5	352.5	840	S<2179>	11093.5	352.5	882	S<2137>	10631.5	352.5

No.	Pad name	X- axis	Y- axis	No.	Pad name	X- axis	Y- axis	No.	Pad name	X- axis	Y- axis
883	S<2136>	10620.5	172.5	925	S<2094>	10158.5	172.5	967	S<2052>	9696.5	172.5
884	S<2135>	10609.5	262.5	926	S<2093>	10147.5	262.5	968	S<2051>	9685.5	262.5
885	S<2134>	10598.5	352.5	927	S<2092>	10136.5	352.5	969	S<2050>	9674.5	352.5
886	S<2133>	10587.5	172.5	928	S<2091>	10125.5	172.5	970	S<2049>	9663.5	172.5
887	S<2132>	10576.5	262.5	929	S<2090>	10114.5	262.5	971	S<2048>	9652.5	262.5
888	S<2131>	10565.5	352.5	930	S<2089>	10103.5	352.5	972	S<2047>	9641.5	352.5
889	S<2130>	10554.5	172.5	931	S<2088>	10092.5	172.5	973	S<2046>	9630.5	172.5
890	S<2129>	10543.5	262.5	932	S<2087>	10081.5	262.5	974	S<2045>	9619.5	262.5
891	S<2128>	10532.5	352.5	933	S<2086>	10070.5	352.5	975	S<2044>	9608.5	352.5
892	S<2127>	10521.5	172.5	934	S<2085>	10059.5	172.5	976	S<2043>	9597.5	172.5
893	S<2126>	10510.5	262.5	935	S<2084>	10048.5	262.5	977	S<2042>	9586.5	262.5
894	S<2125>	10499.5	352.5	936	S<2083>	10037.5	352.5	978	S<2041>	9575.5	352.5
895	S<2124>	10488.5	172.5	937	S<2082>	10026.5	172.5	979	S<2040>	9564.5	172.5
896	S<2123>	10477.5	262.5	938	S<2081>	10015.5	262.5	980	S<2039>	9553.5	262.5
897	S<2122>	10466.5	352.5	939	S<2080>	10004.5	352.5	981	S<2038>	9542.5	352.5
898	S<2121>	10455.5	172.5	940	S<2079>	9993.5	172.5	982	S<2037>	9531.5	172.5
899	S<2120>	10444.5	262.5	941	S<2078>	9982.5	262.5	983	S<2036>	9520.5	262.5
900	S<2119>	10433.5	352.5	942	S<2077>	9971.5	352.5	984	S<2035>	9509.5	352.5
901	S<2118>	10422.5	172.5	943	S<2076>	9960.5	172.5	985	S<2034>	9498.5	172.5
902	S<2117>	10411.5	262.5	944	S<2075>	9949.5	262.5	986	S<2033>	9487.5	262.5
903	S<2116>	10400.5	352.5	945	S<2074>	9938.5	352.5	987	S<2032>	9476.5	352.5
904	S<2115>	10389.5	172.5	946	S<2073>	9927.5	172.5	988	S<2031>	9465.5	172.5
905	S<2114>	10378.5	262.5	947	S<2072>	9916.5	262.5	989	S<2030>	9454.5	262.5
906	S<2113>	10367.5	352.5	948	S<2071>	9905.5	352.5	990	S<2029>	9443.5	352.5
907	S<2112>	10356.5	172.5	949	S<2070>	9894.5	172.5	991	S<2028>	9432.5	172.5
908	S<2111>	10345.5	262.5	950	S<2069>	9883.5	262.5	992	S<2027>	9421.5	262.5
909	S<2110>	10334.5	352.5	951	S<2068>	9872.5	352.5	993	S<2026>	9410.5	352.5
910	S<2109>	10323.5	172.5	952	S<2067>	9861.5	172.5	994	S<2025>	9399.5	172.5
911	S<2108>	10312.5	262.5	953	S<2066>	9850.5	262.5	995	S<2024>	9388.5	262.5
912	S<2107>	10301.5	352.5	954	S<2065>	9839.5	352.5	996	S<2023>	9377.5	352.5
913	S<2106>	10290.5	172.5	955	S<2064>	9828.5	172.5	997	S<2022>	9366.5	172.5
914	S<2105>	10279.5	262.5	956	S<2063>	9817.5	262.5	998	S<2021>	9355.5	262.5
915	S<2104>	10268.5	352.5	957	S<2062>	9806.5	352.5	999	S<2020>	9344.5	352.5
916	S<2103>	10257.5	172.5	958	S<2061>	9795.5	172.5	1000	S<2019>	9333.5	172.5
917	S<2102>	10246.5	262.5	959	S<2060>	9784.5	262.5	1001	S<2018>	9322.5	262.5
918	S<2101>	10235.5	352.5	960	S<2059>	9773.5	352.5	1002	S<2017>	9311.5	352.5
919	S<2100>	10224.5	172.5	961	S<2058>	9762.5	172.5	1003	S<2016>	9300.5	172.5
920	S<2099>	10213.5	262.5	962	S<2057>	9751.5	262.5	1004	S<2015>	9289.5	262.5
921	S<2098>	10202.5	352.5	963	S<2056>	9740.5	352.5	1005	S<2014>	9278.5	352.5
922	S<2097>	10191.5	172.5	964	S<2055>	9729.5	172.5	1006	S<2013>	9267.5	172.5
923	S<2096>	10180.5	262.5	965	S<2054>	9718.5	262.5	1007	S<2012>	9256.5	262.5
924	S<2095>	10169.5	352.5	966	S<2053>	9707.5	352.5	1008	S<2011>	9245.5	352.5

No.	Pad name	X- axis	Y- axis	No.	Pad name	X- axis	Y- axis	No.	Pad name	X- axis	Y- axis
1009	S<2010>	9234.5	172.5	1051	S<1968>	8772.5	172.5	1093	S<1926>	8310.5	172.5
1010	S<2009>	9223.5	262.5	1052	S<1967>	8761.5	262.5	1094	S<1925>	8299.5	262.5
1011	S<2008>	9212.5	352.5	1053	S<1966>	8750.5	352.5	1095	S<1924>	8288.5	352.5
1012	S<2007>	9201.5	172.5	1054	S<1965>	8739.5	172.5	1096	S<1923>	8277.5	172.5
1013	S<2006>	9190.5	262.5	1055	S<1964>	8728.5	262.5	1097	S<1922>	8266.5	262.5
1014	S<2005>	9179.5	352.5	1056	S<1963>	8717.5	352.5	1098	S<1921>	8255.5	352.5
1015	S<2004>	9168.5	172.5	1057	S<1962>	8706.5	172.5	1099	S<1920>	8244.5	172.5
1016	S<2003>	9157.5	262.5	1058	S<1961>	8695.5	262.5	1100	S<1919>	8233.5	262.5
1017	S<2002>	9146.5	352.5	1059	S<1960>	8684.5	352.5	1101	S<1918>	8222.5	352.5
1018	S<2001>	9135.5	172.5	1060	S<1959>	8673.5	172.5	1102	S<1917>	8211.5	172.5
1019	S<2000>	9124.5	262.5	1061	S<1958>	8662.5	262.5	1103	S<1916>	8200.5	262.5
1020	S<1999>	9113.5	352.5	1062	S<1957>	8651.5	352.5	1104	S<1915>	8189.5	352.5
1021	S<1998>	9102.5	172.5	1063	S<1956>	8640.5	172.5	1105	S<1914>	8178.5	172.5
1022	S<1997>	9091.5	262.5	1064	S<1955>	8629.5	262.5	1106	S<1913>	8167.5	262.5
1023	S<1996>	9080.5	352.5	1065	S<1954>	8618.5	352.5	1107	S<1912>	8156.5	352.5
1024	S<1995>	9069.5	172.5	1066	S<1953>	8607.5	172.5	1108	S<1911>	8145.5	172.5
1025	S<1994>	9058.5	262.5	1067	S<1952>	8596.5	262.5	1109	S<1910>	8134.5	262.5
1026	S<1993>	9047.5	352.5	1068	S<1951>	8585.5	352.5	1110	S<1909>	8123.5	352.5
1027	S<1992>	9036.5	172.5	1069	S<1950>	8574.5	172.5	1111	S<1908>	8112.5	172.5
1028	S<1991>	9025.5	262.5	1070	S<1949>	8563.5	262.5	1112	S<1907>	8101.5	262.5
1029	S<1990>	9014.5	352.5	1071	S<1948>	8552.5	352.5	1113	S<1906>	8090.5	352.5
1030	S<1989>	9003.5	172.5	1072	S<1947>	8541.5	172.5	1114	S<1905>	8079.5	172.5
1031	S<1988>	8992.5	262.5	1073	S<1946>	8530.5	262.5	1115	S<1904>	8068.5	262.5
1032	S<1987>	8981.5	352.5	1074	S<1945>	8519.5	352.5	1116	S<1903>	8057.5	352.5
1033	S<1986>	8970.5	172.5	1075	S<1944>	8508.5	172.5	1117	S<1902>	8046.5	172.5
1034	S<1985>	8959.5	262.5	1076	S<1943>	8497.5	262.5	1118	S<1901>	8035.5	262.5
1035	S<1984>	8948.5	352.5	1077	S<1942>	8486.5	352.5	1119	S<1900>	8024.5	352.5
1036	S<1983>	8937.5	172.5	1078	S<1941>	8475.5	172.5	1120	S<1899>	8013.5	172.5
1037	S<1982>	8926.5	262.5	1079	S<1940>	8464.5	262.5	1121	S<1898>	8002.5	262.5
1038	S<1981>	8915.5	352.5	1080	S<1939>	8453.5	352.5	1122	S<1897>	7991.5	352.5
1039	S<1980>	8904.5	172.5	1081	S<1938>	8442.5	172.5	1123	S<1896>	7980.5	172.5
1040	S<1979>	8893.5	262.5	1082	S<1937>	8431.5	262.5	1124	S<1895>	7969.5	262.5
1041	S<1978>	8882.5	352.5	1083	S<1936>	8420.5	352.5	1125	S<1894>	7958.5	352.5
1042	S<1977>	8871.5	172.5	1084	S<1935>	8409.5	172.5	1126	S<1893>	7947.5	172.5
1043	S<1976>	8860.5	262.5	1085	S<1934>	8398.5	262.5	1127	S<1892>	7936.5	262.5
1044	S<1975>	8849.5	352.5	1086	S<1933>	8387.5	352.5	1128	S<1891>	7925.5	352.5
1045	S<1974>	8838.5	172.5	1087	S<1932>	8376.5	172.5	1129	S<1890>	7914.5	172.5
1046	S<1973>	8827.5	262.5	1088	S<1931>	8365.5	262.5	1130	S<1889>	7903.5	262.5
1047	S<1972>	8816.5	352.5	1089	S<1930>	8354.5	352.5	1131	S<1888>	7892.5	352.5
1048	S<1971>	8805.5	172.5	1090	S<1929>	8343.5	172.5	1132	S<1887>	7881.5	172.5
1049	S<1970>	8794.5	262.5	1091	S<1928>	8332.5	262.5	1133	S<1886>	7870.5	262.5
1050	S<1969>	8783.5	352.5	1092	S<1927>	8321.5	352.5	1134	S<1885>	7859.5	352.5

No.	Pad name	X- axis	Y- axis	No.	Pad name	X- axis	Y- axis	No.	Pad name	X- axis	Y- axis
1135	S<1884>	7848.5	172.5	1177	S<1842>	7386.5	172.5	1219	DUMMY13	6924.5	172.5
1136	S<1883>	7837.5	262.5	1178	S<1841>	7375.5	262.5	1220	DUMMY14	6913.5	262.5
1137	S<1882>	7826.5	352.5	1179	S<1840>	7364.5	352.5	1221	DUMMY15	6902.5	352.5
1138	S<1881>	7815.5	172.5	1180	S<1839>	7353.5	172.5	1222	DUMMY16	6891.5	172.5
1139	S<1880>	7804.5	262.5	1181	S<1838>	7342.5	262.5	1223	DUMMY17	6880.5	262.5
1140	S<1879>	7793.5	352.5	1182	S<1837>	7331.5	352.5	1224	DUMMY18	6869.5	352.5
1141	S<1878>	7782.5	172.5	1183	S<1836>	7320.5	172.5	1225	DUMMY19	6858.5	172.5
1142	S<1877>	7771.5	262.5	1184	S<1835>	7309.5	262.5	1226	DUMMY20	6847.5	262.5
1143	S<1876>	7760.5	352.5	1185	S<1834>	7298.5	352.5	1227	DUMMY21	6836.5	352.5
1144	S<1875>	7749.5	172.5	1186	S<1833>	7287.5	172.5	1228	DUMMY22	6825.5	172.5
1145	S<1874>	7738.5	262.5	1187	S<1832>	7276.5	262.5	1229	DUMMY23	6814.5	262.5
1146	S<1873>	7727.5	352.5	1188	S<1831>	7265.5	352.5	1230	DUMMY24	6803.5	352.5
1147	S<1872>	7716.5	172.5	1189	S<1830>	7254.5	172.5	1231	DUMMY25	6792.5	172.5
1148	S<1871>	7705.5	262.5	1190	S<1829>	7243.5	262.5	1232	DUMMY26	6781.5	262.5
1149	S<1870>	7694.5	352.5	1191	S<1828>	7232.5	352.5	1233	DUMMY27	6770.5	352.5
1150	S<1869>	7683.5	172.5	1192	S<1827>	7221.5	172.5	1234	DUMMY28	6759.5	172.5
1151	S<1868>	7672.5	262.5	1193	S<1826>	7210.5	262.5	1235	DUMMY29	6748.5	262.5
1152	S<1867>	7661.5	352.5	1194	S<1825>	7199.5	352.5	1236	DUMMY30	6737.5	352.5
1153	S<1866>	7650.5	172.5	1195	S<1824>	7188.5	172.5	1237	S<1800>	6726.5	172.5
1154	S<1865>	7639.5	262.5	1196	S<1823>	7177.5	262.5	1238	S<1799>	6715.5	262.5
1155	S<1864>	7628.5	352.5	1197	S<1822>	7166.5	352.5	1239	S<1798>	6704.5	352.5
1156	S<1863>	7617.5	172.5	1198	S<1821>	7155.5	172.5	1240	S<1797>	6693.5	172.5
1157	S<1862>	7606.5	262.5	1199	S<1820>	7144.5	262.5	1241	S<1796>	6682.5	262.5
1158	S<1861>	7595.5	352.5	1200	S<1819>	7133.5	352.5	1242	S<1795>	6671.5	352.5
1159	S<1860>	7584.5	172.5	1201	S<1818>	7122.5	172.5	1243	S<1794>	6660.5	172.5
1160	S<1859>	7573.5	262.5	1202	S<1817>	7111.5	262.5	1244	S<1793>	6649.5	262.5
1161	S<1858>	7562.5	352.5	1203	S<1816>	7100.5	352.5	1245	S<1792>	6638.5	352.5
1162	S<1857>	7551.5	172.5	1204	S<1815>	7089.5	172.5	1246	S<1791>	6627.5	172.5
1163	S<1856>	7540.5	262.5	1205	S<1814>	7078.5	262.5	1247	S<1790>	6616.5	262.5
1164	S<1855>	7529.5	352.5	1206	S<1813>	7067.5	352.5	1248	S<1789>	6605.5	352.5
1165	S<1854>	7518.5	172.5	1207	S<1812>	7056.5	172.5	1249	S<1788>	6594.5	172.5
1166	S<1853>	7507.5	262.5	1208	S<1811>	7045.5	262.5	1250	S<1787>	6583.5	262.5
1167	S<1852>	7496.5	352.5	1209	S<1810>	7034.5	352.5	1251	S<1786>	6572.5	352.5
1168	S<1851>	7485.5	172.5	1210	S<1809>	7023.5	172.5	1252	S<1785>	6561.5	172.5
1169	S<1850>	7474.5	262.5	1211	S<1808>	7012.5	262.5	1253	S<1784>	6550.5	262.5
1170	S<1849>	7463.5	352.5	1212	S<1807>	7001.5	352.5	1254	S<1783>	6539.5	352.5
1171	S<1848>	7452.5	172.5	1213	S<1806>	6990.5	172.5	1255	S<1782>	6528.5	172.5
1172	S<1847>	7441.5	262.5	1214	S<1805>	6979.5	262.5	1256	S<1781>	6517.5	262.5
1173	S<1846>	7430.5	352.5	1215	S<1804>	6968.5	352.5	1257	S<1780>	6506.5	352.5
1174	S<1845>	7419.5	172.5	1216	S<1803>	6957.5	172.5	1258	S<1779>	6495.5	172.5
1175	S<1844>	7408.5	262.5	1217	S<1802>	6946.5	262.5	1259	S<1778>	6484.5	262.5
1176	S<1843>	7397.5	352.5	1218	S<1801>	6935.5	352.5	1260	S<1777>	6473.5	352.5

No.	Pad name	X- axis	Y- axis	No.	Pad name	X- axis	Y- axis	No.	Pad name	X- axis	Y- axis
1261	S<1776>	6462.5	172.5	1303	S<1734>	6000.5	172.5	1345	S<1692>	5538.5	172.5
1262	S<1775>	6451.5	262.5	1304	S<1733>	5989.5	262.5	1346	S<1691>	5527.5	262.5
1263	S<1774>	6440.5	352.5	1305	S<1732>	5978.5	352.5	1347	S<1690>	5516.5	352.5
1264	S<1773>	6429.5	172.5	1306	S<1731>	5967.5	172.5	1348	S<1689>	5505.5	172.5
1265	S<1772>	6418.5	262.5	1307	S<1730>	5956.5	262.5	1349	S<1688>	5494.5	262.5
1266	S<1771>	6407.5	352.5	1308	S<1729>	5945.5	352.5	1350	S<1687>	5483.5	352.5
1267	S<1770>	6396.5	172.5	1309	S<1728>	5934.5	172.5	1351	S<1686>	5472.5	172.5
1268	S<1769>	6385.5	262.5	1310	S<1727>	5923.5	262.5	1352	S<1685>	5461.5	262.5
1269	S<1768>	6374.5	352.5	1311	S<1726>	5912.5	352.5	1353	S<1684>	5450.5	352.5
1270	S<1767>	6363.5	172.5	1312	S<1725>	5901.5	172.5	1354	S<1683>	5439.5	172.5
1271	S<1766>	6352.5	262.5	1313	S<1724>	5890.5	262.5	1355	S<1682>	5428.5	262.5
1272	S<1765>	6341.5	352.5	1314	S<1723>	5879.5	352.5	1356	S<1681>	5417.5	352.5
1273	S<1764>	6330.5	172.5	1315	S<1722>	5868.5	172.5	1357	S<1680>	5406.5	172.5
1274	S<1763>	6319.5	262.5	1316	S<1721>	5857.5	262.5	1358	S<1679>	5395.5	262.5
1275	S<1762>	6308.5	352.5	1317	S<1720>	5846.5	352.5	1359	S<1678>	5384.5	352.5
1276	S<1761>	6297.5	172.5	1318	S<1719>	5835.5	172.5	1360	S<1677>	5373.5	172.5
1277	S<1760>	6286.5	262.5	1319	S<1718>	5824.5	262.5	1361	S<1676>	5362.5	262.5
1278	S<1759>	6275.5	352.5	1320	S<1717>	5813.5	352.5	1362	S<1675>	5351.5	352.5
1279	S<1758>	6264.5	172.5	1321	S<1716>	5802.5	172.5	1363	S<1674>	5340.5	172.5
1280	S<1757>	6253.5	262.5	1322	S<1715>	5791.5	262.5	1364	S<1673>	5329.5	262.5
1281	S<1756>	6242.5	352.5	1323	S<1714>	5780.5	352.5	1365	S<1672>	5318.5	352.5
1282	S<1755>	6231.5	172.5	1324	S<1713>	5769.5	172.5	1366	S<1671>	5307.5	172.5
1283	S<1754>	6220.5	262.5	1325	S<1712>	5758.5	262.5	1367	S<1670>	5296.5	262.5
1284	S<1753>	6209.5	352.5	1326	S<1711>	5747.5	352.5	1368	S<1669>	5285.5	352.5
1285	S<1752>	6198.5	172.5	1327	S<1710>	5736.5	172.5	1369	S<1668>	5274.5	172.5
1286	S<1751>	6187.5	262.5	1328	S<1709>	5725.5	262.5	1370	S<1667>	5263.5	262.5
1287	S<1750>	6176.5	352.5	1329	S<1708>	5714.5	352.5	1371	S<1666>	5252.5	352.5
1288	S<1749>	6165.5	172.5	1330	S<1707>	5703.5	172.5	1372	S<1665>	5241.5	172.5
1289	S<1748>	6154.5	262.5	1331	S<1706>	5692.5	262.5	1373	S<1664>	5230.5	262.5
1290	S<1747>	6143.5	352.5	1332	S<1705>	5681.5	352.5	1374	S<1663>	5219.5	352.5
1291	S<1746>	6132.5	172.5	1333	S<1704>	5670.5	172.5	1375	S<1662>	5208.5	172.5
1292	S<1745>	6121.5	262.5	1334	S<1703>	5659.5	262.5	1376	S<1661>	5197.5	262.5
1293	S<1744>	6110.5	352.5	1335	S<1702>	5648.5	352.5	1377	S<1660>	5186.5	352.5
1294	S<1743>	6099.5	172.5	1336	S<1701>	5637.5	172.5	1378	S<1659>	5175.5	172.5
1295	S<1742>	6088.5	262.5	1337	S<1700>	5626.5	262.5	1379	S<1658>	5164.5	262.5
1296	S<1741>	6077.5	352.5	1338	S<1699>	5615.5	352.5	1380	S<1657>	5153.5	352.5
1297	S<1740>	6066.5	172.5	1339	S<1698>	5604.5	172.5	1381	S<1656>	5142.5	172.5
1298	S<1739>	6055.5	262.5	1340	S<1697>	5593.5	262.5	1382	S<1655>	5131.5	262.5
1299	S<1738>	6044.5	352.5	1341	S<1696>	5582.5	352.5	1383	S<1654>	5120.5	352.5
1300	S<1737>	6033.5	172.5	1342	S<1695>	5571.5	172.5	1384	S<1653>	5109.5	172.5
1301	S<1736>	6022.5	262.5	1343	S<1694>	5560.5	262.5	1385	S<1652>	5098.5	262.5
1302	S<1735>	6011.5	352.5	1344	S<1693>	5549.5	352.5	1386	S<1651>	5087.5	352.5

No.	Pad name	X- axis	Y- axis	No.	Pad name	X- axis	Y- axis	No.	Pad name	X- axis	Y- axis
1387	S<1650>	5076.5	172.5	1429	S<1608>	4614.5	172.5	1471	S<1566>	4152.5	172.5
1388	S<1649>	5065.5	262.5	1430	S<1607>	4603.5	262.5	1472	S<1565>	4141.5	262.5
1389	S<1648>	5054.5	352.5	1431	S<1606>	4592.5	352.5	1473	S<1564>	4130.5	352.5
1390	S<1647>	5043.5	172.5	1432	S<1605>	4581.5	172.5	1474	S<1563>	4119.5	172.5
1391	S<1646>	5032.5	262.5	1433	S<1604>	4570.5	262.5	1475	S<1562>	4108.5	262.5
1392	S<1645>	5021.5	352.5	1434	S<1603>	4559.5	352.5	1476	S<1561>	4097.5	352.5
1393	S<1644>	5010.5	172.5	1435	S<1602>	4548.5	172.5	1477	S<1560>	4086.5	172.5
1394	S<1643>	4999.5	262.5	1436	S<1601>	4537.5	262.5	1478	S<1559>	4075.5	262.5
1395	S<1642>	4988.5	352.5	1437	S<1600>	4526.5	352.5	1479	S<1558>	4064.5	352.5
1396	S<1641>	4977.5	172.5	1438	S<1599>	4515.5	172.5	1480	S<1557>	4053.5	172.5
1397	S<1640>	4966.5	262.5	1439	S<1598>	4504.5	262.5	1481	S<1556>	4042.5	262.5
1398	S<1639>	4955.5	352.5	1440	S<1597>	4493.5	352.5	1482	S<1555>	4031.5	352.5
1399	S<1638>	4944.5	172.5	1441	S<1596>	4482.5	172.5	1483	S<1554>	4020.5	172.5
1400	S<1637>	4933.5	262.5	1442	S<1595>	4471.5	262.5	1484	S<1553>	4009.5	262.5
1401	S<1636>	4922.5	352.5	1443	S<1594>	4460.5	352.5	1485	S<1552>	3998.5	352.5
1402	S<1635>	4911.5	172.5	1444	S<1593>	4449.5	172.5	1486	S<1551>	3987.5	172.5
1403	S<1634>	4900.5	262.5	1445	S<1592>	4438.5	262.5	1487	S<1550>	3976.5	262.5
1404	S<1633>	4889.5	352.5	1446	S<1591>	4427.5	352.5	1488	S<1549>	3965.5	352.5
1405	S<1632>	4878.5	172.5	1447	S<1590>	4416.5	172.5	1489	S<1548>	3954.5	172.5
1406	S<1631>	4867.5	262.5	1448	S<1589>	4405.5	262.5	1490	S<1547>	3943.5	262.5
1407	S<1630>	4856.5	352.5	1449	S<1588>	4394.5	352.5	1491	S<1546>	3932.5	352.5
1408	S<1629>	4845.5	172.5	1450	S<1587>	4383.5	172.5	1492	S<1545>	3921.5	172.5
1409	S<1628>	4834.5	262.5	1451	S<1586>	4372.5	262.5	1493	S<1544>	3910.5	262.5
1410	S<1627>	4823.5	352.5	1452	S<1585>	4361.5	352.5	1494	S<1543>	3899.5	352.5
1411	S<1626>	4812.5	172.5	1453	S<1584>	4350.5	172.5	1495	S<1542>	3888.5	172.5
1412	S<1625>	4801.5	262.5	1454	S<1583>	4339.5	262.5	1496	S<1541>	3877.5	262.5
1413	S<1624>	4790.5	352.5	1455	S<1582>	4328.5	352.5	1497	S<1540>	3866.5	352.5
1414	S<1623>	4779.5	172.5	1456	S<1581>	4317.5	172.5	1498	S<1539>	3855.5	172.5
1415	S<1622>	4768.5	262.5	1457	S<1580>	4306.5	262.5	1499	S<1538>	3844.5	262.5
1416	S<1621>	4757.5	352.5	1458	S<1579>	4295.5	352.5	1500	S<1537>	3833.5	352.5
1417	S<1620>	4746.5	172.5	1459	S<1578>	4284.5	172.5	1501	S<1536>	3822.5	172.5
1418	S<1619>	4735.5	262.5	1460	S<1577>	4273.5	262.5	1502	S<1535>	3811.5	262.5
1419	S<1618>	4724.5	352.5	1461	S<1576>	4262.5	352.5	1503	S<1534>	3800.5	352.5
1420	S<1617>	4713.5	172.5	1462	S<1575>	4251.5	172.5	1504	S<1533>	3789.5	172.5
1421	S<1616>	4702.5	262.5	1463	S<1574>	4240.5	262.5	1505	S<1532>	3778.5	262.5
1422	S<1615>	4691.5	352.5	1464	S<1573>	4229.5	352.5	1506	S<1531>	3767.5	352.5
1423	S<1614>	4680.5	172.5	1465	S<1572>	4218.5	172.5	1507	S<1530>	3756.5	172.5
1424	S<1613>	4669.5	262.5	1466	S<1571>	4207.5	262.5	1508	S<1529>	3745.5	262.5
1425	S<1612>	4658.5	352.5	1467	S<1570>	4196.5	352.5	1509	S<1528>	3734.5	352.5
1426	S<1611>	4647.5	172.5	1468	S<1569>	4185.5	172.5	1510	S<1527>	3723.5	172.5
1427	S<1610>	4636.5	262.5	1469	S<1568>	4174.5	262.5	1511	S<1526>	3712.5	262.5
1428	S<1609>	4625.5	352.5	1470	S<1567>	4163.5	352.5	1512	S<1525>	3701.5	352.5

No.	Pad name	X- axis	Y- axis	No.	Pad name	X- axis	Y- axis	No.	Pad name	X- axis	Y- axis
1513	S<1524>	3690.5	172.5	1555	S<1482>	3228.5	172.5	1597	S<1440>	2766.5	172.5
1514	S<1523>	3679.5	262.5	1556	S<1481>	3217.5	262.5	1598	S<1439>	2755.5	262.5
1515	S<1522>	3668.5	352.5	1557	S<1480>	3206.5	352.5	1599	S<1438>	2744.5	352.5
1516	S<1521>	3657.5	172.5	1558	S<1479>	3195.5	172.5	1600	S<1437>	2733.5	172.5
1517	S<1520>	3646.5	262.5	1559	S<1478>	3184.5	262.5	1601	S<1436>	2722.5	262.5
1518	S<1519>	3635.5	352.5	1560	S<1477>	3173.5	352.5	1602	S<1435>	2711.5	352.5
1519	S<1518>	3624.5	172.5	1561	S<1476>	3162.5	172.5	1603	S<1434>	2700.5	172.5
1520	S<1517>	3613.5	262.5	1562	S<1475>	3151.5	262.5	1604	S<1433>	2689.5	262.5
1521	S<1516>	3602.5	352.5	1563	S<1474>	3140.5	352.5	1605	S<1432>	2678.5	352.5
1522	S<1515>	3591.5	172.5	1564	S<1473>	3129.5	172.5	1606	S<1431>	2667.5	172.5
1523	S<1514>	3580.5	262.5	1565	S<1472>	3118.5	262.5	1607	S<1430>	2656.5	262.5
1524	S<1513>	3569.5	352.5	1566	S<1471>	3107.5	352.5	1608	S<1429>	2645.5	352.5
1525	S<1512>	3558.5	172.5	1567	S<1470>	3096.5	172.5	1609	S<1428>	2634.5	172.5
1526	S<1511>	3547.5	262.5	1568	S<1469>	3085.5	262.5	1610	S<1427>	2623.5	262.5
1527	S<1510>	3536.5	352.5	1569	S<1468>	3074.5	352.5	1611	S<1426>	2612.5	352.5
1528	S<1509>	3525.5	172.5	1570	S<1467>	3063.5	172.5	1612	S<1425>	2601.5	172.5
1529	S<1508>	3514.5	262.5	1571	S<1466>	3052.5	262.5	1613	S<1424>	2590.5	262.5
1530	S<1507>	3503.5	352.5	1572	S<1465>	3041.5	352.5	1614	S<1423>	2579.5	352.5
1531	S<1506>	3492.5	172.5	1573	S<1464>	3030.5	172.5	1615	S<1422>	2568.5	172.5
1532	S<1505>	3481.5	262.5	1574	S<1463>	3019.5	262.5	1616	S<1421>	2557.5	262.5
1533	S<1504>	3470.5	352.5	1575	S<1462>	3008.5	352.5	1617	S<1420>	2546.5	352.5
1534	S<1503>	3459.5	172.5	1576	S<1461>	2997.5	172.5	1618	S<1419>	2535.5	172.5
1535	S<1502>	3448.5	262.5	1577	S<1460>	2986.5	262.5	1619	S<1418>	2524.5	262.5
1536	S<1501>	3437.5	352.5	1578	S<1459>	2975.5	352.5	1620	S<1417>	2513.5	352.5
1537	S<1500>	3426.5	172.5	1579	S<1458>	2964.5	172.5	1621	S<1416>	2502.5	172.5
1538	S<1499>	3415.5	262.5	1580	S<1457>	2953.5	262.5	1622	S<1415>	2491.5	262.5
1539	S<1498>	3404.5	352.5	1581	S<1456>	2942.5	352.5	1623	S<1414>	2480.5	352.5
1540	S<1497>	3393.5	172.5	1582	S<1455>	2931.5	172.5	1624	S<1413>	2469.5	172.5
1541	S<1496>	3382.5	262.5	1583	S<1454>	2920.5	262.5	1625	S<1412>	2458.5	262.5
1542	S<1495>	3371.5	352.5	1584	S<1453>	2909.5	352.5	1626	S<1411>	2447.5	352.5
1543	S<1494>	3360.5	172.5	1585	S<1452>	2898.5	172.5	1627	S<1410>	2436.5	172.5
1544	S<1493>	3349.5	262.5	1586	S<1451>	2887.5	262.5	1628	S<1409>	2425.5	262.5
1545	S<1492>	3338.5	352.5	1587	S<1450>	2876.5	352.5	1629	S<1408>	2414.5	352.5
1546	S<1491>	3327.5	172.5	1588	S<1449>	2865.5	172.5	1630	S<1407>	2403.5	172.5
1547	S<1490>	3316.5	262.5	1589	S<1448>	2854.5	262.5	1631	S<1406>	2392.5	262.5
1548	S<1489>	3305.5	352.5	1590	S<1447>	2843.5	352.5	1632	S<1405>	2381.5	352.5
1549	S<1488>	3294.5	172.5	1591	S<1446>	2832.5	172.5	1633	S<1404>	2370.5	172.5
1550	S<1487>	3283.5	262.5	1592	S<1445>	2821.5	262.5	1634	S<1403>	2359.5	262.5
1551	S<1486>	3272.5	352.5	1593	S<1444>	2810.5	352.5	1635	S<1402>	2348.5	352.5
1552	S<1485>	3261.5	172.5	1594	S<1443>	2799.5	172.5	1636	S<1401>	2337.5	172.5
1553	S<1484>	3250.5	262.5	1595	S<1442>	2788.5	262.5	1637	S<1400>	2326.5	262.5
1554	S<1483>	3239.5	352.5	1596	S<1441>	2777.5	352.5	1638	S<1399>	2315.5	352.5

No.	Pad name	X- axis	Y- axis	No.	Pad name	X- axis	Y- axis	No.	Pad name	X- axis	Y- axis
1639	S<1398>	2304.5	172.5	1681	S<1356>	1842.5	172.5	1723	S<1314>	1380.5	172.5
1640	S<1397>	2293.5	262.5	1682	S<1355>	1831.5	262.5	1724	S<1313>	1369.5	262.5
1641	S<1396>	2282.5	352.5	1683	S<1354>	1820.5	352.5	1725	S<1312>	1358.5	352.5
1642	S<1395>	2271.5	172.5	1684	S<1353>	1809.5	172.5	1726	S<1311>	1347.5	172.5
1643	S<1394>	2260.5	262.5	1685	S<1352>	1798.5	262.5	1727	S<1310>	1336.5	262.5
1644	S<1393>	2249.5	352.5	1686	S<1351>	1787.5	352.5	1728	S<1309>	1325.5	352.5
1645	S<1392>	2238.5	172.5	1687	S<1350>	1776.5	172.5	1729	S<1308>	1314.5	172.5
1646	S<1391>	2227.5	262.5	1688	S<1349>	1765.5	262.5	1730	S<1307>	1303.5	262.5
1647	S<1390>	2216.5	352.5	1689	S<1348>	1754.5	352.5	1731	S<1306>	1292.5	352.5
1648	S<1389>	2205.5	172.5	1690	S<1347>	1743.5	172.5	1732	S<1305>	1281.5	172.5
1649	S<1388>	2194.5	262.5	1691	S<1346>	1732.5	262.5	1733	S<1304>	1270.5	262.5
1650	S<1387>	2183.5	352.5	1692	S<1345>	1721.5	352.5	1734	S<1303>	1259.5	352.5
1651	S<1386>	2172.5	172.5	1693	S<1344>	1710.5	172.5	1735	S<1302>	1248.5	172.5
1652	S<1385>	2161.5	262.5	1694	S<1343>	1699.5	262.5	1736	S<1301>	1237.5	262.5
1653	S<1384>	2150.5	352.5	1695	S<1342>	1688.5	352.5	1737	S<1300>	1226.5	352.5
1654	S<1383>	2139.5	172.5	1696	S<1341>	1677.5	172.5	1738	S<1299>	1215.5	172.5
1655	S<1382>	2128.5	262.5	1697	S<1340>	1666.5	262.5	1739	S<1298>	1204.5	262.5
1656	S<1381>	2117.5	352.5	1698	S<1339>	1655.5	352.5	1740	S<1297>	1193.5	352.5
1657	S<1380>	2106.5	172.5	1699	S<1338>	1644.5	172.5	1741	S<1296>	1182.5	172.5
1658	S<1379>	2095.5	262.5	1700	S<1337>	1633.5	262.5	1742	S<1295>	1171.5	262.5
1659	S<1378>	2084.5	352.5	1701	S<1336>	1622.5	352.5	1743	S<1294>	1160.5	352.5
1660	S<1377>	2073.5	172.5	1702	S<1335>	1611.5	172.5	1744	S<1293>	1149.5	172.5
1661	S<1376>	2062.5	262.5	1703	S<1334>	1600.5	262.5	1745	S<1292>	1138.5	262.5
1662	S<1375>	2051.5	352.5	1704	S<1333>	1589.5	352.5	1746	S<1291>	1127.5	352.5
1663	S<1374>	2040.5	172.5	1705	S<1332>	1578.5	172.5	1747	S<1290>	1116.5	172.5
1664	S<1373>	2029.5	262.5	1706	S<1331>	1567.5	262.5	1748	S<1289>	1105.5	262.5
1665	S<1372>	2018.5	352.5	1707	S<1330>	1556.5	352.5	1749	S<1288>	1094.5	352.5
1666	S<1371>	2007.5	172.5	1708	S<1329>	1545.5	172.5	1750	S<1287>	1083.5	172.5
1667	S<1370>	1996.5	262.5	1709	S<1328>	1534.5	262.5	1751	S<1286>	1072.5	262.5
1668	S<1369>	1985.5	352.5	1710	S<1327>	1523.5	352.5	1752	S<1285>	1061.5	352.5
1669	S<1368>	1974.5	172.5	1711	S<1326>	1512.5	172.5	1753	S<1284>	1050.5	172.5
1670	S<1367>	1963.5	262.5	1712	S<1325>	1501.5	262.5	1754	S<1283>	1039.5	262.5
1671	S<1366>	1952.5	352.5	1713	S<1324>	1490.5	352.5	1755	S<1282>	1028.5	352.5
1672	S<1365>	1941.5	172.5	1714	S<1323>	1479.5	172.5	1756	S<1281>	1017.5	172.5
1673	S<1364>	1930.5	262.5	1715	S<1322>	1468.5	262.5	1757	S<1280>	1006.5	262.5
1674	S<1363>	1919.5	352.5	1716	S<1321>	1457.5	352.5	1758	S<1279>	995.5	352.5
1675	S<1362>	1908.5	172.5	1717	S<1320>	1446.5	172.5	1759	S<1278>	984.5	172.5
1676	S<1361>	1897.5	262.5	1718	S<1319>	1435.5	262.5	1760	S<1277>	973.5	262.5
1677	S<1360>	1886.5	352.5	1719	S<1318>	1424.5	352.5	1761	S<1276>	962.5	352.5
1678	S<1359>	1875.5	172.5	1720	S<1317>	1413.5	172.5	1762	S<1275>	951.5	172.5
1679	S<1358>	1864.5	262.5	1721	S<1316>	1402.5	262.5	1763	S<1274>	940.5	262.5
1680	S<1357>	1853.5	352.5	1722	S<1315>	1391.5	352.5	1764	S<1273>	929.5	352.5

No.	Pad name	X- axis	Y- axis	No.	Pad name	X- axis	Y- axis	No.	Pad name	X- axis	Y- axis
1765	S<1272>	918.5	172.5	1807	DUMMY121	456.5	172.5	1849	DUMMY163	-5.5	172.5
1766	S<1271>	907.5	262.5	1808	DUMMY122	445.5	262.5	1850	DUMMY164	-16.5	262.5
1767	S<1270>	896.5	352.5	1809	DUMMY123	434.5	352.5	1851	DUMMY165	-27.5	352.5
1768	S<1269>	885.5	172.5	1810	DUMMY124	423.5	172.5	1852	DUMMY166	-38.5	172.5
1769	S<1268>	874.5	262.5	1811	DUMMY125	412.5	262.5	1853	DUMMY167	-49.5	262.5
1770	S<1267>	863.5	352.5	1812	DUMMY126	401.5	352.5	1854	DUMMY168	-60.5	352.5
1771	S<1266>	852.5	172.5	1813	DUMMY127	390.5	172.5	1855	DUMMY169	-71.5	172.5
1772	S<1265>	841.5	262.5	1814	DUMMY128	379.5	262.5	1856	DUMMY170	-82.5	262.5
1773	S<1264>	830.5	352.5	1815	DUMMY129	368.5	352.5	1857	DUMMY171	-93.5	352.5
1774	S<1263>	819.5	172.5	1816	DUMMY130	357.5	172.5	1858	DUMMY172	-104.5	172.5
1775	S<1262>	808.5	262.5	1817	DUMMY131	346.5	262.5	1859	DUMMY173	-115.5	262.5
1776	S<1261>	797.5	352.5	1818	DUMMY132	335.5	352.5	1860	DUMMY174	-126.5	352.5
1777	S<1260>	786.5	172.5	1819	DUMMY133	324.5	172.5	1861	DUMMY175	-137.5	172.5
1778	S<1259>	775.5	262.5	1820	DUMMY134	313.5	262.5	1862	DUMMY176	-148.5	262.5
1779	S<1258>	764.5	352.5	1821	DUMMY135	302.5	352.5	1863	DUMMY177	-159.5	352.5
1780	S<1257>	753.5	172.5	1822	DUMMY136	291.5	172.5	1864	DUMMY178	-170.5	172.5
1781	S<1256>	742.5	262.5	1823	DUMMY137	280.5	262.5	1865	DUMMY179	-181.5	262.5
1782	S<1255>	731.5	352.5	1824	DUMMY138	269.5	352.5	1866	DUMMY180	-192.5	352.5
1783	S<1254>	720.5	172.5	1825	DUMMY139	258.5	172.5	1867	DUMMY181	-203.5	172.5
1784	S<1253>	709.5	262.5	1826	DUMMY140	247.5	262.5	1868	DUMMY182	-214.5	262.5
1785	S<1252>	698.5	352.5	1827	DUMMY141	236.5	352.5	1869	DUMMY183	-225.5	352.5
1786	S<1251>	687.5	172.5	1828	DUMMY142	225.5	172.5	1870	DUMMY184	-236.5	172.5
1787	S<1250>	676.5	262.5	1829	DUMMY143	214.5	262.5	1871	DUMMY185	-247.5	262.5
1788	S<1249>	665.5	352.5	1830	DUMMY144	203.5	352.5	1872	DUMMY186	-258.5	352.5
1789	DUMMY103	654.5	172.5	1831	DUMMY145	192.5	172.5	1873	DUMMY187	-269.5	172.5
1790	DUMMY104	643.5	262.5	1832	DUMMY146	181.5	262.5	1874	DUMMY188	-280.5	262.5
1791	DUMMY105	632.5	352.5	1833	DUMMY147	170.5	352.5	1875	DUMMY189	-291.5	352.5
1792	DUMMY106	621.5	172.5	1834	DUMMY148	159.5	172.5	1876	DUMMY190	-302.5	172.5
1793	DUMMY107	610.5	262.5	1835	DUMMY149	148.5	262.5	1877	DUMMY191	-313.5	262.5
1794	DUMMY108	599.5	352.5	1836	DUMMY150	137.5	352.5	1878	DUMMY192	-324.5	352.5
1795	DUMMY109	588.5	172.5	1837	DUMMY151	126.5	172.5	1879	DUMMY193	-335.5	172.5
1796	DUMMY110	577.5	262.5	1838	DUMMY152	115.5	262.5	1880	DUMMY194	-346.5	262.5
1797	DUMMY111	566.5	352.5	1839	DUMMY153	104.5	352.5	1881	DUMMY195	-357.5	352.5
1798	DUMMY112	555.5	172.5	1840	DUMMY154	93.5	172.5	1882	DUMMY196	-368.5	172.5
1799	DUMMY113	544.5	262.5	1841	DUMMY155	82.5	262.5	1883	DUMMY197	-379.5	262.5
1800	DUMMY114	533.5	352.5	1842	DUMMY156	71.5	352.5	1884	DUMMY198	-390.5	352.5
1801	DUMMY115	522.5	172.5	1843	DUMMY157	60.5	172.5	1885	DUMMY199	-401.5	172.5
1802	DUMMY116	511.5	262.5	1844	DUMMY158	49.5	262.5	1886	DUMMY200	-412.5	262.5
1803	DUMMY117	500.5	352.5	1845	DUMMY159	38.5	352.5	1887	DUMMY201	-423.5	352.5
1804	DUMMY118	489.5	172.5	1846	DUMMY160	27.5	172.5	1888	DUMMY202	-434.5	172.5
1805	DUMMY119	478.5	262.5	1847	DUMMY161	16.5	262.5	1889	DUMMY203	-445.5	262.5
1806	DUMMY120	467.5	352.5	1848	DUMMY162	5.5	352.5	1890	DUMMY204	-456.5	352.5

No.	Pad name	X- axis	Y- axis	No.	Pad name	X- axis	Y- axis	No.	Pad name	X- axis	Y- axis
1891	DUMMY205	-467.500	172.5	1933	S<1128>	-929.500	172.5	1975	S<1086>	-1391.500	172.5
1892	DUMMY206	-478.500	262.5	1934	S<1127>	-940.500	262.5	1976	S<1085>	-1402.500	262.5
1893	DUMMY207	-489.500	352.5	1935	S<1126>	-951.500	352.5	1977	S<1084>	-1413.500	352.5
1894	DUMMY208	-500.500	172.5	1936	S<1125>	-962.500	172.5	1978	S<1083>	-1424.500	172.5
1895	DUMMY209	-511.500	262.5	1937	S<1124>	-973.500	262.5	1979	S<1082>	-1435.500	262.5
1896	DUMMY210	-522.500	352.5	1938	S<1123>	-984.500	352.5	1980	S<1081>	-1446.500	352.5
1897	DUMMY211	-533.500	172.5	1939	S<1122>	-995.500	172.5	1981	S<1080>	-1457.500	172.5
1898	DUMMY212	-544.500	262.5	1940	S<1121>	-1006.500	262.5	1982	S<1079>	-1468.500	262.5
1899	DUMMY213	-555.500	352.5	1941	S<1120>	-1017.500	352.5	1983	S<1078>	-1479.500	352.5
1900	DUMMY214	-566.500	172.5	1942	S<1119>	-1028.500	172.5	1984	S<1077>	-1490.500	172.5
1901	DUMMY215	-577.500	262.5	1943	S<1118>	-1039.500	262.5	1985	S<1076>	-1501.500	262.5
1902	DUMMY216	-588.500	352.5	1944	S<1117>	-1050.500	352.5	1986	S<1075>	-1512.500	352.5
1903	DUMMY217	-599.500	172.5	1945	S<1116>	-1061.500	172.5	1987	S<1074>	-1523.500	172.5
1904	DUMMY218	-610.500	262.5	1946	S<1115>	-1072.500	262.5	1988	S<1073>	-1534.500	262.5
1905	DUMMY219	-621.500	352.5	1947	S<1114>	-1083.500	352.5	1989	S<1072>	-1545.500	352.5
1906	DUMMY220	-632.500	172.5	1948	S<1113>	-1094.500	172.5	1990	S<1071>	-1556.500	172.5
1907	DUMMY221	-643.500	262.5	1949	S<1112>	-1105.500	262.5	1991	S<1070>	-1567.500	262.5
1908	DUMMY222	-654.500	352.5	1950	S<1111>	-1116.500	352.5	1992	S<1069>	-1578.500	352.5
1909	S<1152>	-665.500	172.5	1951	S<1110>	-1127.500	172.5	1993	S<1068>	-1589.500	172.5
1910	S<1151>	-676.500	262.5	1952	S<1109>	-1138.500	262.5	1994	S<1067>	-1600.500	262.5
1911	S<1150>	-687.500	352.5	1953	S<1108>	-1149.500	352.5	1995	S<1066>	-1611.500	352.5
1912	S<1149>	-698.500	172.5	1954	S<1107>	-1160.500	172.5	1996	S<1065>	-1622.500	172.5
1913	S<1148>	-709.500	262.5	1955	S<1106>	-1171.500	262.5	1997	S<1064>	-1633.500	262.5
1914	S<1147>	-720.500	352.5	1956	S<1105>	-1182.500	352.5	1998	S<1063>	-1644.500	352.5
1915	S<1146>	-731.500	172.5	1957	S<1104>	-1193.500	172.5	1999	S<1062>	-1655.500	172.5
1916	S<1145>	-742.500	262.5	1958	S<1103>	-1204.500	262.5	2000	S<1061>	-1666.500	262.5
1917	S<1144>	-753.500	352.5	1959	S<1102>	-1215.500	352.5	2001	S<1060>	-1677.500	352.5
1918	S<1143>	-764.500	172.5	1960	S<1101>	-1226.500	172.5	2002	S<1059>	-1688.500	172.5
1919	S<1142>	-775.500	262.5	1961	S<1100>	-1237.500	262.5	2003	S<1058>	-1699.500	262.5
1920	S<1141>	-786.500	352.5	1962	S<1099>	-1248.500	352.5	2004	S<1057>	-1710.500	352.5
1921	S<1140>	-797.500	172.5	1963	S<1098>	-1259.500	172.5	2005	S<1056>	-1721.500	172.5
1922	S<1139>	-808.500	262.5	1964	S<1097>	-1270.500	262.5	2006	S<1055>	-1732.500	262.5
1923	S<1138>	-819.500	352.5	1965	S<1096>	-1281.500	352.5	2007	S<1054>	-1743.500	352.5
1924	S<1137>	-830.500	172.5	1966	S<1095>	-1292.500	172.5	2008	S<1053>	-1754.500	172.5
1925	S<1136>	-841.500	262.5	1967	S<1094>	-1303.500	262.5	2009	S<1052>	-1765.500	262.5
1926	S<1135>	-852.500	352.5	1968	S<1093>	-1314.500	352.5	2010	S<1051>	-1776.500	352.5
1927	S<1134>	-863.500	172.5	1969	S<1092>	-1325.500	172.5	2011	S<1050>	-1787.500	172.5
1928	S<1133>	-874.500	262.5	1970	S<1091>	-1336.500	262.5	2012	S<1049>	-1798.500	262.5
1929	S<1132>	-885.500	352.5	1971	S<1090>	-1347.500	352.5	2013	S<1048>	-1809.500	352.5
1930	S<1131>	-896.500	172.5	1972	S<1089>	-1358.500	172.5	2014	S<1047>	-1820.500	172.5
1931	S<1130>	-907.500	262.5	1973	S<1088>	-1369.500	262.5	2015	S<1046>	-1831.500	262.5
1932	S<1129>	-918.500	352.5	1974	S<1087>	-1380.500	352.5	2016	S<1045>	-1842.500	352.5

No.	Pad name	X- axis	Y- axis	No.	Pad name	X- axis	Y- axis	No.	Pad name	X- axis	Y- axis
2017	S<1044>	-1853.500	172.5	2059	S<1002>	-2315.500	172.5	2101	S<960>	-2777.500	172.5
2018	S<1043>	-1864.500	262.5	2060	S<1001>	-2326.500	262.5	2102	S<959>	-2788.500	262.5
2019	S<1042>	-1875.500	352.5	2061	S<1000>	-2337.500	352.5	2103	S<958>	-2799.500	352.5
2020	S<1041>	-1886.500	172.5	2062	S<999>	-2348.500	172.5	2104	S<957>	-2810.500	172.5
2021	S<1040>	-1897.500	262.5	2063	S<998>	-2359.500	262.5	2105	S<956>	-2821.500	262.5
2022	S<1039>	-1908.500	352.5	2064	S<997>	-2370.500	352.5	2106	S<955>	-2832.500	352.5
2023	S<1038>	-1919.500	172.5	2065	S<996>	-2381.500	172.5	2107	S<954>	-2843.500	172.5
2024	S<1037>	-1930.500	262.5	2066	S<995>	-2392.500	262.5	2108	S<953>	-2854.500	262.5
2025	S<1036>	-1941.500	352.5	2067	S<994>	-2403.500	352.5	2109	S<952>	-2865.500	352.5
2026	S<1035>	-1952.500	172.5	2068	S<993>	-2414.500	172.5	2110	S<951>	-2876.500	172.5
2027	S<1034>	-1963.500	262.5	2069	S<992>	-2425.500	262.5	2111	S<950>	-2887.500	262.5
2028	S<1033>	-1974.500	352.5	2070	S<991>	-2436.500	352.5	2112	S<949>	-2898.500	352.5
2029	S<1032>	-1985.500	172.5	2071	S<990>	-2447.500	172.5	2113	S<948>	-2909.500	172.5
2030	S<1031>	-1996.500	262.5	2072	S<989>	-2458.500	262.5	2114	S<947>	-2920.500	262.5
2031	S<1030>	-2007.500	352.5	2073	S<988>	-2469.500	352.5	2115	S<946>	-2931.500	352.5
2032	S<1029>	-2018.500	172.5	2074	S<987>	-2480.500	172.5	2116	S<945>	-2942.500	172.5
2033	S<1028>	-2029.500	262.5	2075	S<986>	-2491.500	262.5	2117	S<944>	-2953.500	262.5
2034	S<1027>	-2040.500	352.5	2076	S<985>	-2502.500	352.5	2118	S<943>	-2964.500	352.5
2035	S<1026>	-2051.500	172.5	2077	S<984>	-2513.500	172.5	2119	S<942>	-2975.500	172.5
2036	S<1025>	-2062.500	262.5	2078	S<983>	-2524.500	262.5	2120	S<941>	-2986.500	262.5
2037	S<1024>	-2073.500	352.5	2079	S<982>	-2535.500	352.5	2121	S<940>	-2997.500	352.5
2038	S<1023>	-2084.500	172.5	2080	S<981>	-2546.500	172.5	2122	S<939>	-3008.500	172.5
2039	S<1022>	-2095.500	262.5	2081	S<980>	-2557.500	262.5	2123	S<938>	-3019.500	262.5
2040	S<1021>	-2106.500	352.5	2082	S<979>	-2568.500	352.5	2124	S<937>	-3030.500	352.5
2041	S<1020>	-2117.500	172.5	2083	S<978>	-2579.500	172.5	2125	S<936>	-3041.500	172.5
2042	S<1019>	-2128.500	262.5	2084	S<977>	-2590.500	262.5	2126	S<935>	-3052.500	262.5
2043	S<1018>	-2139.500	352.5	2085	S<976>	-2601.500	352.5	2127	S<934>	-3063.500	352.5
2044	S<1017>	-2150.500	172.5	2086	S<975>	-2612.500	172.5	2128	S<933>	-3074.500	172.5
2045	S<1016>	-2161.500	262.5	2087	S<974>	-2623.500	262.5	2129	S<932>	-3085.500	262.5
2046	S<1015>	-2172.500	352.5	2088	S<973>	-2634.500	352.5	2130	S<931>	-3096.500	352.5
2047	S<1014>	-2183.500	172.5	2089	S<972>	-2645.500	172.5	2131	S<930>	-3107.500	172.5
2048	S<1013>	-2194.500	262.5	2090	S<971>	-2656.500	262.5	2132	S<929>	-3118.500	262.5
2049	S<1012>	-2205.500	352.5	2091	S<970>	-2667.500	352.5	2133	S<928>	-3129.500	352.5
2050	S<1011>	-2216.500	172.5	2092	S<969>	-2678.500	172.5	2134	S<927>	-3140.500	172.5
2051	S<1010>	-2227.500	262.5	2093	S<968>	-2689.500	262.5	2135	S<926>	-3151.500	262.5
2052	S<1009>	-2238.500	352.5	2094	S<967>	-2700.500	352.5	2136	S<925>	-3162.500	352.5
2053	S<1008>	-2249.500	172.5	2095	S<966>	-2711.500	172.5	2137	S<924>	-3173.500	172.5
2054	S<1007>	-2260.500	262.5	2096	S<965>	-2722.500	262.5	2138	S<923>	-3184.500	262.5
2055	S<1006>	-2271.500	352.5	2097	S<964>	-2733.500	352.5	2139	S<922>	-3195.500	352.5
2056	S<1005>	-2282.500	172.5	2098	S<963>	-2744.500	172.5	2140	S<921>	-3206.500	172.5
2057	S<1004>	-2293.500	262.5	2099	S<962>	-2755.500	262.5	2141	S<920>	-3217.500	262.5
2058	S<1003>	-2304.500	352.5	2100	S<961>	-2766.500	352.5	2142	S<919>	-3228.500	352.5

No.	Pad name	X- axis	Y- axis	No.	Pad name	X- axis	Y- axis	No.	Pad name	X- axis	Y- axis
2143	S<918>	-3239.500	172.5	2185	S<876>	-3701.500	172.5	2227	S<834>	-4163.500	172.5
2144	S<917>	-3250.500	262.5	2186	S<875>	-3712.500	262.5	2228	S<833>	-4174.500	262.5
2145	S<916>	-3261.500	352.5	2187	S<874>	-3723.500	352.5	2229	S<832>	-4185.500	352.5
2146	S<915>	-3272.500	172.5	2188	S<873>	-3734.500	172.5	2230	S<831>	-4196.500	172.5
2147	S<914>	-3283.500	262.5	2189	S<872>	-3745.500	262.5	2231	S<830>	-4207.500	262.5
2148	S<913>	-3294.500	352.5	2190	S<871>	-3756.500	352.5	2232	S<829>	-4218.500	352.5
2149	S<912>	-3305.500	172.5	2191	S<870>	-3767.500	172.5	2233	S<828>	-4229.500	172.5
2150	S<911>	-3316.500	262.5	2192	S<869>	-3778.500	262.5	2234	S<827>	-4240.500	262.5
2151	S<910>	-3327.500	352.5	2193	S<868>	-3789.500	352.5	2235	S<826>	-4251.500	352.5
2152	S<909>	-3338.500	172.5	2194	S<867>	-3800.500	172.5	2236	S<825>	-4262.500	172.5
2153	S<908>	-3349.500	262.5	2195	S<866>	-3811.500	262.5	2237	S<824>	-4273.500	262.5
2154	S<907>	-3360.500	352.5	2196	S<865>	-3822.500	352.5	2238	S<823>	-4284.500	352.5
2155	S<906>	-3371.500	172.5	2197	S<864>	-3833.500	172.5	2239	S<822>	-4295.500	172.5
2156	S<905>	-3382.500	262.5	2198	S<863>	-3844.500	262.5	2240	S<821>	-4306.500	262.5
2157	S<904>	-3393.500	352.5	2199	S<862>	-3855.500	352.5	2241	S<820>	-4317.500	352.5
2158	S<903>	-3404.500	172.5	2200	S<861>	-3866.500	172.5	2242	S<819>	-4328.500	172.5
2159	S<902>	-3415.500	262.5	2201	S<860>	-3877.500	262.5	2243	S<818>	-4339.500	262.5
2160	S<901>	-3426.500	352.5	2202	S<859>	-3888.500	352.5	2244	S<817>	-4350.500	352.5
2161	S<900>	-3437.500	172.5	2203	S<858>	-3899.500	172.5	2245	S<816>	-4361.500	172.5
2162	S<899>	-3448.500	262.5	2204	S<857>	-3910.500	262.5	2246	S<815>	-4372.500	262.5
2163	S<898>	-3459.500	352.5	2205	S<856>	-3921.500	352.5	2247	S<814>	-4383.500	352.5
2164	S<897>	-3470.500	172.5	2206	S<855>	-3932.500	172.5	2248	S<813>	-4394.500	172.5
2165	S<896>	-3481.500	262.5	2207	S<854>	-3943.500	262.5	2249	S<812>	-4405.500	262.5
2166	S<895>	-3492.500	352.5	2208	S<853>	-3954.500	352.5	2250	S<811>	-4416.500	352.5
2167	S<894>	-3503.500	172.5	2209	S<852>	-3965.500	172.5	2251	S<810>	-4427.500	172.5
2168	S<893>	-3514.500	262.5	2210	S<851>	-3976.500	262.5	2252	S<809>	-4438.500	262.5
2169	S<892>	-3525.500	352.5	2211	S<850>	-3987.500	352.5	2253	S<808>	-4449.500	352.5
2170	S<891>	-3536.500	172.5	2212	S<849>	-3998.500	172.5	2254	S<807>	-4460.500	172.5
2171	S<890>	-3547.500	262.5	2213	S<848>	-4009.500	262.5	2255	S<806>	-4471.500	262.5
2172	S<889>	-3558.500	352.5	2214	S<847>	-4020.500	352.5	2256	S<805>	-4482.500	352.5
2173	S<888>	-3569.500	172.5	2215	S<846>	-4031.500	172.5	2257	S<804>	-4493.500	172.5
2174	S<887>	-3580.500	262.5	2216	S<845>	-4042.500	262.5	2258	S<803>	-4504.500	262.5
2175	S<886>	-3591.500	352.5	2217	S<844>	-4053.500	352.5	2259	S<802>	-4515.500	352.5
2176	S<885>	-3602.500	172.5	2218	S<843>	-4064.500	172.5	2260	S<801>	-4526.500	172.5
2177	S<884>	-3613.500	262.5	2219	S<842>	-4075.500	262.5	2261	S<800>	-4537.500	262.5
2178	S<883>	-3624.500	352.5	2220	S<841>	-4086.500	352.5	2262	S<799>	-4548.500	352.5
2179	S<882>	-3635.500	172.5	2221	S<840>	-4097.500	172.5	2263	S<798>	-4559.500	172.5
2180	S<881>	-3646.500	262.5	2222	S<839>	-4108.500	262.5	2264	S<797>	-4570.500	262.5
2181	S<880>	-3657.500	352.5	2223	S<838>	-4119.500	352.5	2265	S<796>	-4581.500	352.5
2182	S<879>	-3668.500	172.5	2224	S<837>	-4130.500	172.5	2266	S<795>	-4592.500	172.5
2183	S<878>	-3679.500	262.5	2225	S<836>	-4141.500	262.5	2267	S<794>	-4603.500	262.5
2184	S<877>	-3690.500	352.5	2226	S<835>	-4152.500	352.5	2268	S<793>	-4614.500	352.5

No.	Pad name	X- axis	Y- axis	No.	Pad name	X- axis	Y- axis	No.	Pad name	X- axis	Y- axis
2269	S<792>	-4625.500	172.5	2311	S<750>	-5087.500	172.5	2353	S<708>	-5549.500	172.5
2270	S<791>	-4636.500	262.5	2312	S<749>	-5098.500	262.5	2354	S<707>	-5560.500	262.5
2271	S<790>	-4647.500	352.5	2313	S<748>	-5109.500	352.5	2355	S<706>	-5571.500	352.5
2272	S<789>	-4658.500	172.5	2314	S<747>	-5120.500	172.5	2356	S<705>	-5582.500	172.5
2273	S<788>	-4669.500	262.5	2315	S<746>	-5131.500	262.5	2357	S<704>	-5593.500	262.5
2274	S<787>	-4680.500	352.5	2316	S<745>	-5142.500	352.5	2358	S<703>	-5604.500	352.5
2275	S<786>	-4691.500	172.5	2317	S<744>	-5153.500	172.5	2359	S<702>	-5615.500	172.5
2276	S<785>	-4702.500	262.5	2318	S<743>	-5164.500	262.5	2360	S<701>	-5626.500	262.5
2277	S<784>	-4713.500	352.5	2319	S<742>	-5175.500	352.5	2361	S<700>	-5637.500	352.5
2278	S<783>	-4724.500	172.5	2320	S<741>	-5186.500	172.5	2362	S<699>	-5648.500	172.5
2279	S<782>	-4735.500	262.5	2321	S<740>	-5197.500	262.5	2363	S<698>	-5659.500	262.5
2280	S<781>	-4746.500	352.5	2322	S<739>	-5208.500	352.5	2364	S<697>	-5670.500	352.5
2281	S<780>	-4757.500	172.5	2323	S<738>	-5219.500	172.5	2365	S<696>	-5681.500	172.5
2282	S<779>	-4768.500	262.5	2324	S<737>	-5230.500	262.5	2366	S<695>	-5692.500	262.5
2283	S<778>	-4779.500	352.5	2325	S<736>	-5241.500	352.5	2367	S<694>	-5703.500	352.5
2284	S<777>	-4790.500	172.5	2326	S<735>	-5252.500	172.5	2368	S<693>	-5714.500	172.5
2285	S<776>	-4801.500	262.5	2327	S<734>	-5263.500	262.5	2369	S<692>	-5725.500	262.5
2286	S<775>	-4812.500	352.5	2328	S<733>	-5274.500	352.5	2370	S<691>	-5736.500	352.5
2287	S<774>	-4823.500	172.5	2329	S<732>	-5285.500	172.5	2371	S<690>	-5747.500	172.5
2288	S<773>	-4834.500	262.5	2330	S<731>	-5296.500	262.5	2372	S<689>	-5758.500	262.5
2289	S<772>	-4845.500	352.5	2331	S<730>	-5307.500	352.5	2373	S<688>	-5769.500	352.5
2290	S<771>	-4856.500	172.5	2332	S<729>	-5318.500	172.5	2374	S<687>	-5780.500	172.5
2291	S<770>	-4867.500	262.5	2333	S<728>	-5329.500	262.5	2375	S<686>	-5791.500	262.5
2292	S<769>	-4878.500	352.5	2334	S<727>	-5340.500	352.5	2376	S<685>	-5802.500	352.5
2293	S<768>	-4889.500	172.5	2335	S<726>	-5351.500	172.5	2377	S<684>	-5813.500	172.5
2294	S<767>	-4900.500	262.5	2336	S<725>	-5362.500	262.5	2378	S<683>	-5824.500	262.5
2295	S<766>	-4911.500	352.5	2337	S<724>	-5373.500	352.5	2379	S<682>	-5835.500	352.5
2296	S<765>	-4922.500	172.5	2338	S<723>	-5384.500	172.5	2380	S<681>	-5846.500	172.5
2297	S<764>	-4933.500	262.5	2339	S<722>	-5395.500	262.5	2381	S<680>	-5857.500	262.5
2298	S<763>	-4944.500	352.5	2340	S<721>	-5406.500	352.5	2382	S<679>	-5868.500	352.5
2299	S<762>	-4955.500	172.5	2341	S<720>	-5417.500	172.5	2383	S<678>	-5879.500	172.5
2300	S<761>	-4966.500	262.5	2342	S<719>	-5428.500	262.5	2384	S<677>	-5890.500	262.5
2301	S<760>	-4977.500	352.5	2343	S<718>	-5439.500	352.5	2385	S<676>	-5901.500	352.5
2302	S<759>	-4988.500	172.5	2344	S<717>	-5450.500	172.5	2386	S<675>	-5912.500	172.5
2303	S<758>	-4999.500	262.5	2345	S<716>	-5461.500	262.5	2387	S<674>	-5923.500	262.5
2304	S<757>	-5010.500	352.5	2346	S<715>	-5472.500	352.5	2388	S<673>	-5934.500	352.5
2305	S<756>	-5021.500	172.5	2347	S<714>	-5483.500	172.5	2389	S<672>	-5945.500	172.5
2306	S<755>	-5032.500	262.5	2348	S<713>	-5494.500	262.5	2390	S<671>	-5956.500	262.5
2307	S<754>	-5043.500	352.5	2349	S<712>	-5505.500	352.5	2391	S<670>	-5967.500	352.5
2308	S<753>	-5054.500	172.5	2350	S<711>	-5516.500	172.5	2392	S<669>	-5978.500	172.5
2309	S<752>	-5065.500	262.5	2351	S<710>	-5527.500	262.5	2393	S<668>	-5989.500	262.5
2310	S<751>	-5076.500	352.5	2352	S<709>	-5538.500	352.5	2394	S<667>	-6000.500	352.5

No.	Pad name	X- axis	Y- axis	No.	Pad name	X- axis	Y- axis	No.	Pad name	X- axis	Y- axis
2395	S<666>	-6011.500	172.5	2437	S<624>	-6473.500	172.5	2479	S<600>	-6935.500	172.5
2396	S<665>	-6022.500	262.5	2438	S<623>	-6484.500	262.5	2480	S<599>	-6946.500	262.5
2397	S<664>	-6033.500	352.5	2439	S<622>	-6495.500	352.5	2481	S<598>	-6957.500	352.5
2398	S<663>	-6044.500	172.5	2440	S<621>	-6506.500	172.5	2482	S<597>	-6968.500	172.5
2399	S<662>	-6055.500	262.5	2441	S<620>	-6517.500	262.5	2483	S<596>	-6979.500	262.5
2400	S<661>	-6066.500	352.5	2442	S<619>	-6528.500	352.5	2484	S<595>	-6990.500	352.5
2401	S<660>	-6077.500	172.5	2443	S<618>	-6539.500	172.5	2485	S<594>	-7001.500	172.5
2402	S<659>	-6088.500	262.5	2444	S<617>	-6550.500	262.5	2486	S<593>	-7012.500	262.5
2403	S<658>	-6099.500	352.5	2445	S<616>	-6561.500	352.5	2487	S<592>	-7023.500	352.5
2404	S<657>	-6110.500	172.5	2446	S<615>	-6572.500	172.5	2488	S<591>	-7034.500	172.5
2405	S<656>	-6121.500	262.5	2447	S<614>	-6583.500	262.5	2489	S<590>	-7045.500	262.5
2406	S<655>	-6132.500	352.5	2448	S<613>	-6594.500	352.5	2490	S<589>	-7056.500	352.5
2407	S<654>	-6143.500	172.5	2449	S<612>	-6605.500	172.5	2491	S<588>	-7067.500	172.5
2408	S<653>	-6154.500	262.5	2450	S<611>	-6616.500	262.5	2492	S<587>	-7078.500	262.5
2409	S<652>	-6165.500	352.5	2451	S<610>	-6627.500	352.5	2493	S<586>	-7089.500	352.5
2410	S<651>	-6176.500	172.5	2452	S<609>	-6638.500	172.5	2494	S<585>	-7100.500	172.5
2411	S<650>	-6187.500	262.5	2453	S<608>	-6649.500	262.5	2495	S<584>	-7111.500	262.5
2412	S<649>	-6198.500	352.5	2454	S<607>	-6660.500	352.5	2496	S<583>	-7122.500	352.5
2413	S<648>	-6209.500	172.5	2455	S<606>	-6671.500	172.5	2497	S<582>	-7133.500	172.5
2414	S<647>	-6220.500	262.5	2456	S<605>	-6682.500	262.5	2498	S<581>	-7144.500	262.5
2415	S<646>	-6231.500	352.5	2457	S<604>	-6693.500	352.5	2499	S<580>	-7155.500	352.5
2416	S<645>	-6242.500	172.5	2458	S<603>	-6704.500	172.5	2500	S<579>	-7166.500	172.5
2417	S<644>	-6253.500	262.5	2459	S<602>	-6715.500	262.5	2501	S<578>	-7177.500	262.5
2418	S<643>	-6264.500	352.5	2460	S<601>	-6726.500	352.5	2502	S<577>	-7188.500	352.5
2419	S<642>	-6275.500	172.5	2461	DUMMY295	-6737.500	172.5	2503	S<576>	-7199.500	172.5
2420	S<641>	-6286.500	262.5	2462	DUMMY296	-6748.500	262.5	2504	S<575>	-7210.500	262.5
2421	S<640>	-6297.500	352.5	2463	DUMMY297	-6759.500	352.5	2505	S<574>	-7221.500	352.5
2422	S<639>	-6308.500	172.5	2464	DUMMY298	-6770.500	172.5	2506	S<573>	-7232.500	172.5
2423	S<638>	-6319.500	262.5	2465	DUMMY299	-6781.500	262.5	2507	S<572>	-7243.500	262.5
2424	S<637>	-6330.500	352.5	2466	DUMMY300	-6792.500	352.5	2508	S<571>	-7254.500	352.5
2425	S<636>	-6341.500	172.5	2467	DUMMY301	-6803.500	172.5	2509	S<570>	-7265.500	172.5
2426	S<635>	-6352.500	262.5	2468	DUMMY302	-6814.500	262.5	2510	S<569>	-7276.500	262.5
2427	S<634>	-6363.500	352.5	2469	DUMMY303	-6825.500	352.5	2511	S<568>	-7287.500	352.5
2428	S<633>	-6374.500	172.5	2470	DUMMY304	-6836.500	172.5	2512	S<567>	-7298.500	172.5
2429	S<632>	-6385.500	262.5	2471	DUMMY305	-6847.500	262.5	2513	S<566>	-7309.500	262.5
2430	S<631>	-6396.500	352.5	2472	DUMMY306	-6858.500	352.5	2514	S<565>	-7320.500	352.5
2431	S<630>	-6407.500	172.5	2473	DUMMY307	-6869.500	172.5	2515	S<564>	-7331.500	172.5
2432	S<629>	-6418.500	262.5	2474	DUMMY308	-6880.500	262.5	2516	S<563>	-7342.500	262.5
2433	S<628>	-6429.500	352.5	2475	DUMMY309	-6891.500	352.5	2517	S<562>	-7353.500	352.5
2434	S<627>	-6440.500	172.5	2476	DUMMY310	-6902.500	172.5	2518	S<561>	-7364.500	172.5
2435	S<626>	-6451.500	262.5	2477	DUMMY311	-6913.500	262.5	2519	S<560>	-7375.500	262.5
2436	S<625>	-6462.500	352.5	2478	DUMMY312	-6924.500	352.5	2520	S<559>	-7386.500	352.5

No.	Pad name	X- axis	Y- axis	No.	Pad name	X- axis	Y- axis	No.	Pad name	X- axis	Y- axis
2521	S<558>	-7397.500	172.5	2563	S<516>	-7859.500	172.5	2605	S<474>	-8321.500	172.5
2522	S<557>	-7408.500	262.5	2564	S<515>	-7870.500	262.5	2606	S<473>	-8332.500	262.5
2523	S<556>	-7419.500	352.5	2565	S<514>	-7881.500	352.5	2607	S<472>	-8343.500	352.5
2524	S<555>	-7430.500	172.5	2566	S<513>	-7892.500	172.5	2608	S<471>	-8354.500	172.5
2525	S<554>	-7441.500	262.5	2567	S<512>	-7903.500	262.5	2609	S<470>	-8365.500	262.5
2526	S<553>	-7452.500	352.5	2568	S<511>	-7914.500	352.5	2610	S<469>	-8376.500	352.5
2527	S<552>	-7463.500	172.5	2569	S<510>	-7925.500	172.5	2611	S<468>	-8387.500	172.5
2528	S<551>	-7474.500	262.5	2570	S<509>	-7936.500	262.5	2612	S<467>	-8398.500	262.5
2529	S<550>	-7485.500	352.5	2571	S<508>	-7947.500	352.5	2613	S<466>	-8409.500	352.5
2530	S<549>	-7496.500	172.5	2572	S<507>	-7958.500	172.5	2614	S<465>	-8420.500	172.5
2531	S<548>	-7507.500	262.5	2573	S<506>	-7969.500	262.5	2615	S<464>	-8431.500	262.5
2532	S<547>	-7518.500	352.5	2574	S<505>	-7980.500	352.5	2616	S<463>	-8442.500	352.5
2533	S<546>	-7529.500	172.5	2575	S<504>	-7991.500	172.5	2617	S<462>	-8453.500	172.5
2534	S<545>	-7540.500	262.5	2576	S<503>	-8002.500	262.5	2618	S<461>	-8464.500	262.5
2535	S<544>	-7551.500	352.5	2577	S<502>	-8013.500	352.5	2619	S<460>	-8475.500	352.5
2536	S<543>	-7562.500	172.5	2578	S<501>	-8024.500	172.5	2620	S<459>	-8486.500	172.5
2537	S<542>	-7573.500	262.5	2579	S<500>	-8035.500	262.5	2621	S<458>	-8497.500	262.5
2538	S<541>	-7584.500	352.5	2580	S<499>	-8046.500	352.5	2622	S<457>	-8508.500	352.5
2539	S<540>	-7595.500	172.5	2581	S<498>	-8057.500	172.5	2623	S<456>	-8519.500	172.5
2540	S<539>	-7606.500	262.5	2582	S<497>	-8068.500	262.5	2624	S<455>	-8530.500	262.5
2541	S<538>	-7617.500	352.5	2583	S<496>	-8079.500	352.5	2625	S<454>	-8541.500	352.5
2542	S<537>	-7628.500	172.5	2584	S<495>	-8090.500	172.5	2626	S<453>	-8552.500	172.5
2543	S<536>	-7639.500	262.5	2585	S<494>	-8101.500	262.5	2627	S<452>	-8563.500	262.5
2544	S<535>	-7650.500	352.5	2586	S<493>	-8112.500	352.5	2628	S<451>	-8574.500	352.5
2545	S<534>	-7661.500	172.5	2587	S<492>	-8123.500	172.5	2629	S<450>	-8585.500	172.5
2546	S<533>	-7672.500	262.5	2588	S<491>	-8134.500	262.5	2630	S<449>	-8596.500	262.5
2547	S<532>	-7683.500	352.5	2589	S<490>	-8145.500	352.5	2631	S<448>	-8607.500	352.5
2548	S<531>	-7694.500	172.5	2590	S<489>	-8156.500	172.5	2632	S<447>	-8618.500	172.5
2549	S<530>	-7705.500	262.5	2591	S<488>	-8167.500	262.5	2633	S<446>	-8629.500	262.5
2550	S<529>	-7716.500	352.5	2592	S<487>	-8178.500	352.5	2634	S<445>	-8640.500	352.5
2551	S<528>	-7727.500	172.5	2593	S<486>	-8189.500	172.5	2635	S<444>	-8651.500	172.5
2552	S<527>	-7738.500	262.5	2594	S<485>	-8200.500	262.5	2636	S<443>	-8662.500	262.5
2553	S<526>	-7749.500	352.5	2595	S<484>	-8211.500	352.5	2637	S<442>	-8673.500	352.5
2554	S<525>	-7760.500	172.5	2596	S<483>	-8222.500	172.5	2638	S<441>	-8684.500	172.5
2555	S<524>	-7771.500	262.5	2597	S<482>	-8233.500	262.5	2639	S<440>	-8695.500	262.5
2556	S<523>	-7782.500	352.5	2598	S<481>	-8244.500	352.5	2640	S<439>	-8706.500	352.5
2557	S<522>	-7793.500	172.5	2599	S<480>	-8255.500	172.5	2641	S<438>	-8717.500	172.5
2558	S<521>	-7804.500	262.5	2600	S<479>	-8266.500	262.5	2642	S<437>	-8728.500	262.5
2559	S<520>	-7815.500	352.5	2601	S<478>	-8277.500	352.5	2643	S<436>	-8739.500	352.5
2560	S<519>	-7826.500	172.5	2602	S<477>	-8288.500	172.5	2644	S<435>	-8750.500	172.5
2561	S<518>	-7837.500	262.5	2603	S<476>	-8299.500	262.5	2645	S<434>	-8761.500	262.5
2562	S<517>	-7848.500	352.5	2604	S<475>	-8310.500	352.5	2646	S<433>	-8772.500	352.5

No.	Pad name	X- axis	Y- axis	No.	Pad name	X- axis	Y- axis	No.	Pad name	X- axis	Y- axis
2647	S<432>	-8783.500	172.5	2689	S<390>	-9245.500	172.5	2731	S<348>	-9707.500	172.5
2648	S<431>	-8794.500	262.5	2690	S<389>	-9256.500	262.5	2732	S<347>	-9718.500	262.5
2649	S<430>	-8805.500	352.5	2691	S<388>	-9267.500	352.5	2733	S<346>	-9729.500	352.5
2650	S<429>	-8816.500	172.5	2692	S<387>	-9278.500	172.5	2734	S<345>	-9740.500	172.5
2651	S<428>	-8827.500	262.5	2693	S<386>	-9289.500	262.5	2735	S<344>	-9751.500	262.5
2652	S<427>	-8838.500	352.5	2694	S<385>	-9300.500	352.5	2736	S<343>	-9762.500	352.5
2653	S<426>	-8849.500	172.5	2695	S<384>	-9311.500	172.5	2737	S<342>	-9773.500	172.5
2654	S<425>	-8860.500	262.5	2696	S<383>	-9322.500	262.5	2738	S<341>	-9784.500	262.5
2655	S<424>	-8871.500	352.5	2697	S<382>	-9333.500	352.5	2739	S<340>	-9795.500	352.5
2656	S<423>	-8882.500	172.5	2698	S<381>	-9344.500	172.5	2740	S<339>	-9806.500	172.5
2657	S<422>	-8893.500	262.5	2699	S<380>	-9355.500	262.5	2741	S<338>	-9817.500	262.5
2658	S<421>	-8904.500	352.5	2700	S<379>	-9366.500	352.5	2742	S<337>	-9828.500	352.5
2659	S<420>	-8915.500	172.5	2701	S<378>	-9377.500	172.5	2743	S<336>	-9839.500	172.5
2660	S<419>	-8926.500	262.5	2702	S<377>	-9388.500	262.5	2744	S<335>	-9850.500	262.5
2661	S<418>	-8937.500	352.5	2703	S<376>	-9399.500	352.5	2745	S<334>	-9861.500	352.5
2662	S<417>	-8948.500	172.5	2704	S<375>	-9410.500	172.5	2746	S<333>	-9872.500	172.5
2663	S<416>	-8959.500	262.5	2705	S<374>	-9421.500	262.5	2747	S<332>	-9883.500	262.5
2664	S<415>	-8970.500	352.5	2706	S<373>	-9432.500	352.5	2748	S<331>	-9894.500	352.5
2665	S<414>	-8981.500	172.5	2707	S<372>	-9443.500	172.5	2749	S<330>	-9905.500	172.5
2666	S<413>	-8992.500	262.5	2708	S<371>	-9454.500	262.5	2750	S<329>	-9916.500	262.5
2667	S<412>	-9003.500	352.5	2709	S<370>	-9465.500	352.5	2751	S<328>	-9927.500	352.5
2668	S<411>	-9014.500	172.5	2710	S<369>	-9476.500	172.5	2752	S<327>	-9938.500	172.5
2669	S<410>	-9025.500	262.5	2711	S<368>	-9487.500	262.5	2753	S<326>	-9949.500	262.5
2670	S<409>	-9036.500	352.5	2712	S<367>	-9498.500	352.5	2754	S<325>	-9960.500	352.5
2671	S<408>	-9047.500	172.5	2713	S<366>	-9509.500	172.5	2755	S<324>	-9971.500	172.5
2672	S<407>	-9058.500	262.5	2714	S<365>	-9520.500	262.5	2756	S<323>	-9982.500	262.5
2673	S<406>	-9069.500	352.5	2715	S<364>	-9531.500	352.5	2757	S<322>	-9993.500	352.5
2674	S<405>	-9080.500	172.5	2716	S<363>	-9542.500	172.5	2758	S<321>	-10004.500	172.5
2675	S<404>	-9091.500	262.5	2717	S<362>	-9553.500	262.5	2759	S<320>	-10015.500	262.5
2676	S<403>	-9102.500	352.5	2718	S<361>	-9564.500	352.5	2760	S<319>	-10026.500	352.5
2677	S<402>	-9113.500	172.5	2719	S<360>	-9575.500	172.5	2761	S<318>	-10037.500	172.5
2678	S<401>	-9124.500	262.5	2720	S<359>	-9586.500	262.5	2762	S<317>	-10048.500	262.5
2679	S<400>	-9135.500	352.5	2721	S<358>	-9597.500	352.5	2763	S<316>	-10059.500	352.5
2680	S<399>	-9146.500	172.5	2722	S<357>	-9608.500	172.5	2764	S<315>	-10070.500	172.5
2681	S<398>	-9157.500	262.5	2723	S<356>	-9619.500	262.5	2765	S<314>	-10081.500	262.5
2682	S<397>	-9168.500	352.5	2724	S<355>	-9630.500	352.5	2766	S<313>	-10092.500	352.5
2683	S<396>	-9179.500	172.5	2725	S<354>	-9641.500	172.5	2767	S<312>	-10103.500	172.5
2684	S<395>	-9190.500	262.5	2726	S<353>	-9652.500	262.5	2768	S<311>	-10114.500	262.5
2685	S<394>	-9201.500	352.5	2727	S<352>	-9663.500	352.5	2769	S<310>	-10125.500	352.5
2686	S<393>	-9212.500	172.5	2728	S<351>	-9674.500	172.5	2770	S<309>	-10136.500	172.5
2687	S<392>	-9223.500	262.5	2729	S<350>	-9685.500	262.5	2771	S<308>	-10147.500	262.5
2688	S<391>	-9234.500	352.5	2730	S<349>	-9696.500	352.5	2772	S<307>	-10158.500	352.5

No.	Pad name	X- axis	Y- axis	No.	Pad name	X- axis	Y- axis	No.	Pad name	X- axis	Y- axis
2773	S<306>	-10169.500	172.5	2815	S<264>	-10631.500	172.5	2857	S<222>	-11093.500	172.5
2774	S<305>	-10180.500	262.5	2816	S<263>	-10642.500	262.5	2858	S<221>	-11104.500	262.5
2775	S<304>	-10191.500	352.5	2817	S<262>	-10653.500	352.5	2859	S<220>	-11115.500	352.5
2776	S<303>	-10202.500	172.5	2818	S<261>	-10664.500	172.5	2860	S<219>	-11126.500	172.5
2777	S<302>	-10213.500	262.5	2819	S<260>	-10675.500	262.5	2861	S<218>	-11137.500	262.5
2778	S<301>	-10224.500	352.5	2820	S<259>	-10686.500	352.5	2862	S<217>	-11148.500	352.5
2779	S<300>	-10235.500	172.5	2821	S<258>	-10697.500	172.5	2863	S<216>	-11159.500	172.5
2780	S<299>	-10246.500	262.5	2822	S<257>	-10708.500	262.5	2864	S<215>	-11170.500	262.5
2781	S<298>	-10257.500	352.5	2823	S<256>	-10719.500	352.5	2865	S<214>	-11181.500	352.5
2782	S<297>	-10268.500	172.5	2824	S<255>	-10730.500	172.5	2866	S<213>	-11192.500	172.5
2783	S<296>	-10279.500	262.5	2825	S<254>	-10741.500	262.5	2867	S<212>	-11203.500	262.5
2784	S<295>	-10290.500	352.5	2826	S<253>	-10752.500	352.5	2868	S<211>	-11214.500	352.5
2785	S<294>	-10301.500	172.5	2827	S<252>	-10763.500	172.5	2869	S<210>	-11225.500	172.5
2786	S<293>	-10312.500	262.5	2828	S<251>	-10774.500	262.5	2870	S<209>	-11236.500	262.5
2787	S<292>	-10323.500	352.5	2829	S<250>	-10785.500	352.5	2871	S<208>	-11247.500	352.5
2788	S<291>	-10334.500	172.5	2830	S<249>	-10796.500	172.5	2872	S<207>	-11258.500	172.5
2789	S<290>	-10345.500	262.5	2831	S<248>	-10807.500	262.5	2873	S<206>	-11269.500	262.5
2790	S<289>	-10356.500	352.5	2832	S<247>	-10818.500	352.5	2874	S<205>	-11280.500	352.5
2791	S<288>	-10367.500	172.5	2833	S<246>	-10829.500	172.5	2875	S<204>	-11291.500	172.5
2792	S<287>	-10378.500	262.5	2834	S<245>	-10840.500	262.5	2876	S<203>	-11302.500	262.5
2793	S<286>	-10389.500	352.5	2835	S<244>	-10851.500	352.5	2877	S<202>	-11313.500	352.5
2794	S<285>	-10400.500	172.5	2836	S<243>	-10862.500	172.5	2878	S<201>	-11324.500	172.5
2795	S<284>	-10411.500	262.5	2837	S<242>	-10873.500	262.5	2879	S<200>	-11335.500	262.5
2796	S<283>	-10422.500	352.5	2838	S<241>	-10884.500	352.5	2880	S<199>	-11346.500	352.5
2797	S<282>	-10433.500	172.5	2839	S<240>	-10895.500	172.5	2881	S<198>	-11357.500	172.5
2798	S<281>	-10444.500	262.5	2840	S<239>	-10906.500	262.5	2882	S<197>	-11368.500	262.5
2799	S<280>	-10455.500	352.5	2841	S<238>	-10917.500	352.5	2883	S<196>	-11379.500	352.5
2800	S<279>	-10466.500	172.5	2842	S<237>	-10928.500	172.5	2884	S<195>	-11390.500	172.5
2801	S<278>	-10477.500	262.5	2843	S<236>	-10939.500	262.5	2885	S<194>	-11401.500	262.5
2802	S<277>	-10488.500	352.5	2844	S<235>	-10950.500	352.5	2886	S<193>	-11412.500	352.5
2803	S<276>	-10499.500	172.5	2845	S<234>	-10961.500	172.5	2887	S<192>	-11423.500	172.5
2804	S<275>	-10510.500	262.5	2846	S<233>	-10972.500	262.5	2888	S<191>	-11434.500	262.5
2805	S<274>	-10521.500	352.5	2847	S<232>	-10983.500	352.5	2889	S<190>	-11445.500	352.5
2806	S<273>	-10532.500	172.5	2848	S<231>	-10994.500	172.5	2890	S<189>	-11456.500	172.5
2807	S<272>	-10543.500	262.5	2849	S<230>	-11005.500	262.5	2891	S<188>	-11467.500	262.5
2808	S<271>	-10554.500	352.5	2850	S<229>	-11016.500	352.5	2892	S<187>	-11478.500	352.5
2809	S<270>	-10565.500	172.5	2851	S<228>	-11027.500	172.5	2893	S<186>	-11489.500	172.5
2810	S<269>	-10576.500	262.5	2852	S<227>	-11038.500	262.5	2894	S<185>	-11500.500	262.5
2811	S<268>	-10587.500	352.5	2853	S<226>	-11049.500	352.5	2895	S<184>	-11511.500	352.5
2812	S<267>	-10598.500	172.5	2854	S<225>	-11060.500	172.5	2896	S<183>	-11522.500	172.5
2813	S<266>	-10609.500	262.5	2855	S<224>	-11071.500	262.5	2897	S<182>	-11533.500	262.5
2814	S<265>	-10620.500	352.5	2856	S<223>	-11082.500	352.5	2898	S<181>	-11544.500	352.5

No.	Pad name	X- axis	Y- axis	No.	Pad name	X- axis	Y- axis	No.	Pad name	X- axis	Y- axis
2899	S<180>	-11555.500	172.5	2941	S<138>	-12017.500	172.5	2983	S<96>	-12479.500	172.5
2900	S<179>	-11566.500	262.5	2942	S<137>	-12028.500	262.5	2984	S<95>	-12490.500	262.5
2901	S<178>	-11577.500	352.5	2943	S<136>	-12039.500	352.5	2985	S<94>	-12501.500	352.5
2902	S<177>	-11588.500	172.5	2944	S<135>	-12050.500	172.5	2986	S<93>	-12512.500	172.5
2903	S<176>	-11599.500	262.5	2945	S<134>	-12061.500	262.5	2987	S<92>	-12523.500	262.5
2904	S<175>	-11610.500	352.5	2946	S<133>	-12072.500	352.5	2988	S<91>	-12534.500	352.5
2905	S<174>	-11621.500	172.5	2947	S<132>	-12083.500	172.5	2989	S<90>	-12545.500	172.5
2906	S<173>	-11632.500	262.5	2948	S<131>	-12094.500	262.5	2990	S<89>	-12556.500	262.5
2907	S<172>	-11643.500	352.5	2949	S<130>	-12105.500	352.5	2991	S<88>	-12567.500	352.5
2908	S<171>	-11654.500	172.5	2950	S<129>	-12116.500	172.5	2992	S<87>	-12578.500	172.5
2909	S<170>	-11665.500	262.5	2951	S<128>	-12127.500	262.5	2993	S<86>	-12589.500	262.5
2910	S<169>	-11676.500	352.5	2952	S<127>	-12138.500	352.5	2994	S<85>	-12600.500	352.5
2911	S<168>	-11687.500	172.5	2953	S<126>	-12149.500	172.5	2995	S<84>	-12611.500	172.5
2912	S<167>	-11698.500	262.5	2954	S<125>	-12160.500	262.5	2996	S<83>	-12622.500	262.5
2913	S<166>	-11709.500	352.5	2955	S<124>	-12171.500	352.5	2997	S<82>	-12633.500	352.5
2914	S<165>	-11720.500	172.5	2956	S<123>	-12182.500	172.5	2998	S<81>	-12644.500	172.5
2915	S<164>	-11731.500	262.5	2957	S<122>	-12193.500	262.5	2999	S<80>	-12655.500	262.5
2916	S<163>	-11742.500	352.5	2958	S<121>	-12204.500	352.5	3000	S<79>	-12666.500	352.5
2917	S<162>	-11753.500	172.5	2959	S<120>	-12215.500	172.5	3001	S<78>	-12677.500	172.5
2918	S<161>	-11764.500	262.5	2960	S<119>	-12226.500	262.5	3002	S<77>	-12688.500	262.5
2919	S<160>	-11775.500	352.5	2961	S<118>	-12237.500	352.5	3003	S<76>	-12699.500	352.5
2920	S<159>	-11786.500	172.5	2962	S<117>	-12248.500	172.5	3004	S<75>	-12710.500	172.5
2921	S<158>	-11797.500	262.5	2963	S<116>	-12259.500	262.5	3005	S<74>	-12721.500	262.5
2922	S<157>	-11808.500	352.5	2964	S<115>	-12270.500	352.5	3006	S<73>	-12732.500	352.5
2923	S<156>	-11819.500	172.5	2965	S<114>	-12281.500	172.5	3007	S<72>	-12743.500	172.5
2924	S<155>	-11830.500	262.5	2966	S<113>	-12292.500	262.5	3008	S<71>	-12754.500	262.5
2925	S<154>	-11841.500	352.5	2967	S<112>	-12303.500	352.5	3009	S<70>	-12765.500	352.5
2926	S<153>	-11852.500	172.5	2968	S<111>	-12314.500	172.5	3010	S<69>	-12776.500	172.5
2927	S<152>	-11863.500	262.5	2969	S<110>	-12325.500	262.5	3011	S<68>	-12787.500	262.5
2928	S<151>	-11874.500	352.5	2970	S<109>	-12336.500	352.5	3012	S<67>	-12798.500	352.5
2929	S<150>	-11885.500	172.5	2971	S<108>	-12347.500	172.5	3013	S<66>	-12809.500	172.5
2930	S<149>	-11896.500	262.5	2972	S<107>	-12358.500	262.5	3014	S<65>	-12820.500	262.5
2931	S<148>	-11907.500	352.5	2973	S<106>	-12369.500	352.5	3015	S<64>	-12831.500	352.5
2932	S<147>	-11918.500	172.5	2974	S<105>	-12380.500	172.5	3016	S<63>	-12842.500	172.5
2933	S<146>	-11929.500	262.5	2975	S<104>	-12391.500	262.5	3017	S<62>	-12853.500	262.5
2934	S<145>	-11940.500	352.5	2976	S<103>	-12402.500	352.5	3018	S<61>	-12864.500	352.5
2935	S<144>	-11951.500	172.5	2977	S<102>	-12413.500	172.5	3019	S<60>	-12875.500	172.5
2936	S<143>	-11962.500	262.5	2978	S<101>	-12424.500	262.5	3020	S<59>	-12886.500	262.5
2937	S<142>	-11973.500	352.5	2979	S<100>	-12435.500	352.5	3021	S<58>	-12897.500	352.5
2938	S<141>	-11984.500	172.5	2980	S<99>	-12446.500	172.5	3022	S<57>	-12908.500	172.5
2939	S<140>	-11995.500	262.5	2981	S<98>	-12457.500	262.5	3023	S<56>	-12919.500	262.5
2940	S<139>	-12006.500	352.5	2982	S<97>	-12468.500	352.5	3024	S<55>	-12930.500	352.5

No.	Pad name	X-axis	Y- axis	No.	Pad name	X- axis	Y- axis
3025	S<54>	-12941.500	172.5	3058	S<21>	-13304.500	172.5
3026	S<53>	-12952.500	262.5	3059	S<20>	-13315.500	262.5
3027	S<52>	-12963.500	352.5	3060	S<19>	-13326.500	352.5
3028	S<51>	-12974.500	172.5	3061	S<18>	-13337.500	172.5
3029	S<50>	-12985.500	262.5	3062	S<17>	-13348.500	262.5
3030	S<49>	-12996.500	352.5	3063	S<16>	-13359.500	352.5
3031	S<48>	-13007.500	172.5	3064	S<15>	-13370.500	172.5
3032	S<47>	-13018.500	262.5	3065	S<14>	-13381.500	262.5
3033	S<46>	-13029.500	352.5	3066	S<13>	-13392.500	352.5
3034	S<45>	-13040.500	172.5	3067	S<12>	-13403.500	172.5
3035	S<44>	-13051.500	262.5	3068	S<11>	-13414.500	262.5
3036	S<43>	-13062.500	352.5	3069	S<10>	-13425.500	352.5
3037	S<42>	-13073.500	172.5	3070	S<9>	-13436.500	172.5
3038	S<41>	-13084.500	262.5	3071	S<8>	-13447.500	262.5
3039	S<40>	-13095.500	352.5	3072	S<7>	-13458.500	352.5
3040	S<39>	-13106.500	172.5	3073	S<6>	-13469.500	172.5
3041	S<38>	-13117.500	262.5	3074	S<5>	-13480.500	262.5
3042	S<37>	-13128.500	352.5	3075	S<4>	-13491.500	352.5
3043	S<36>	-13139.500	172.5	3076	S<3>	-13502.500	172.5
3044	S<35>	-13150.500	262.5	3077	S<2>	-13513.500	262.5
3045	S<34>	-13161.500	352.5	3078	S<1>	-13524.500	352.5
3046	S<33>	-13172.500	172.5	3079	S<0>	-13535.500	172.5
3047	S<32>	-13183.500	262.5	3080	SDUM0	-13546.500	262.5
3048	S<31>	-13194.500	352.5	3081	DUMMY313	-13557.500	352.5
3049	S<30>	-13205.500	172.5	3082	DUMMY314	-13568.500	172.5
3050	S<29>	-13216.500	262.5	3083	DUMMY315	-13579.500	262.5
3051	S<28>	-13227.500	352.5	3084	DUMMY316	-13590.500	352.5
3052	S<27>	-13238.500	172.5	3085	DUMMY317	-13601.500	172.5
3053	S<26>	-13249.500	262.5	3086	DUMMY318	-13612.500	262.5
3054	S<25>	-13260.500	352.5	3087	DUMMY319	-13623.500	352.5
3055	S<24>	-13271.500	172.5	3088	DUMMY320	-13634.500	172.5
3056	S<23>	-13282.500	262.5	3089	DUMMY321	-13645.500	262.5
3057	S<22>	-13293.500	352.5	3090	DUMMY322	-13656.500	352.5

8.3. Alignment Mark

--Alignment Mark coordinate

Left1 (-13706, 360),Right1 (13706, 360)

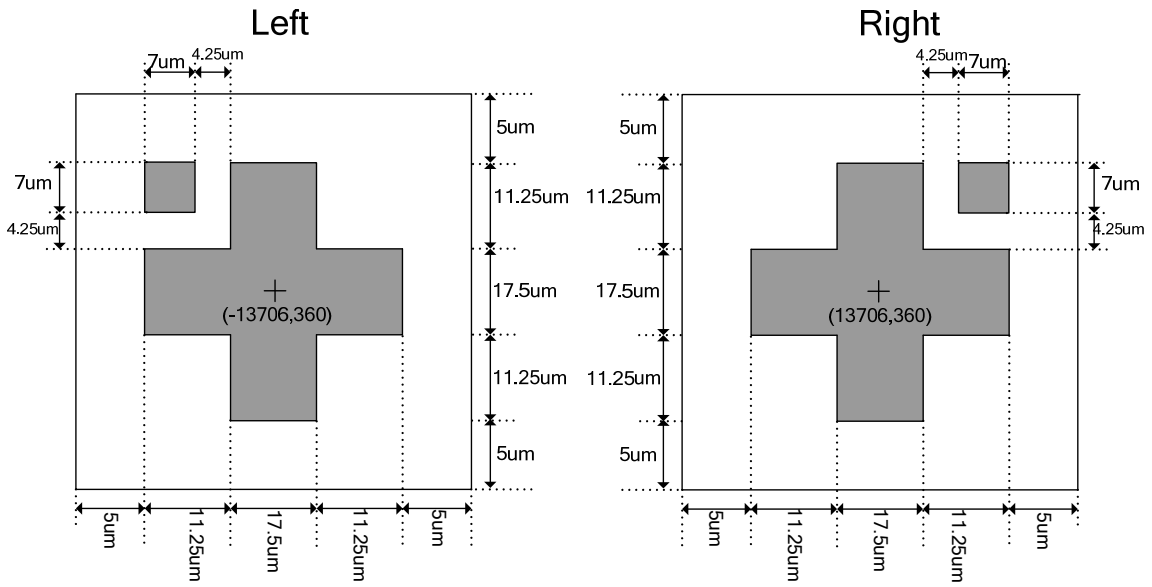

Left2 (-13706, 273),Right2 (13706, 273)

--Alignment Mark size

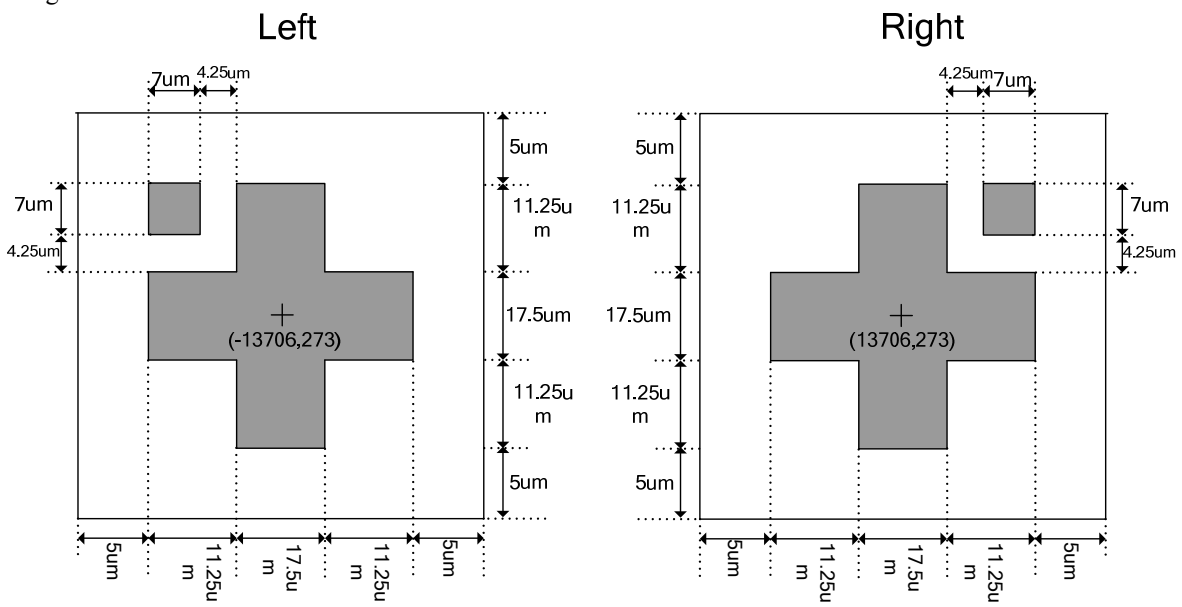

9. DISCLAIMER

The information appearing in this publication is believed to be accurate.

Integrated circuits sold by NV Technology are covered by the warranty and patent indemnification provisions stipulated in the terms of sale only. NV Technology makes no warranty, express, statutory implied or by description regarding the information in this publication or regarding the freedom of the described chip(s) from patent infringement. FURTHERMORE, NV Technology MAKES NO WARRANTY OF MERCHANTABILITY OR FITNESS FOR ANY PURPOSE. NV Technology reserves the right to halt production or alter the specifications and prices at any time without notice. Accordingly, the reader is cautioned to verify that the data sheets and other information in this publication are current before placing orders. Products described herein are intended for use in normal commercial applications. Applications involving unusual environmental or reliability requirements, e.g. military equipment or medical life support equipment, are specifically not recommended without additional processing by NV Technology for such applications. Please note that application circuits illustrated in this document are for reference purposes only.

Revision history

Version No.	Date	Page	Introduction
0.1	2020-4-17	All	New build.
0.2	2021-9-29	All	Change “Operating Temperature -30℃～+70℃” to “-30℃～+85℃”; Change “Storage Temperature -40℃～+85℃” to “-40℃～+125℃”;